AD-A092 278 NAVAL POSTGRADUATE SCHOOL MONTEREY CA F/G 12/2
EXCHANGE SERVICE STATION GASOLINE PUMPING OPERATION SIMULATION.(U)
JUN 80 J F HENN

UNCLASSIFIED NL

1 of 2

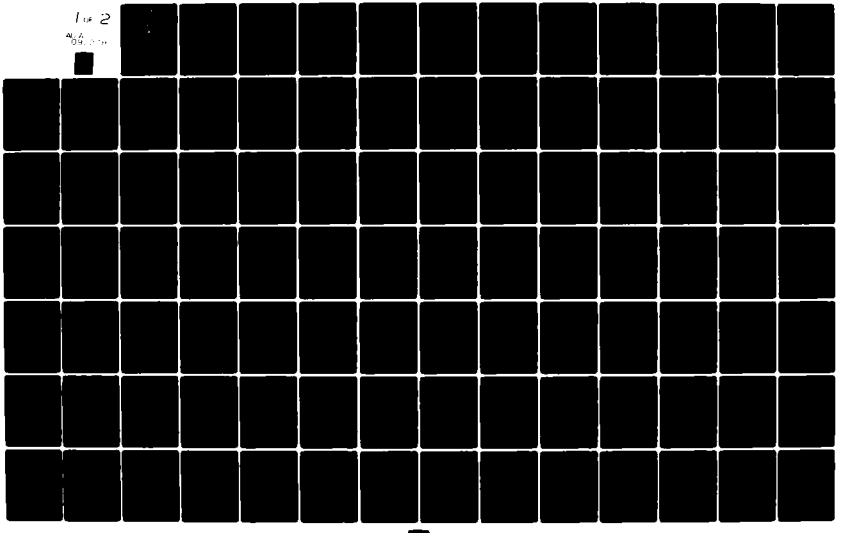

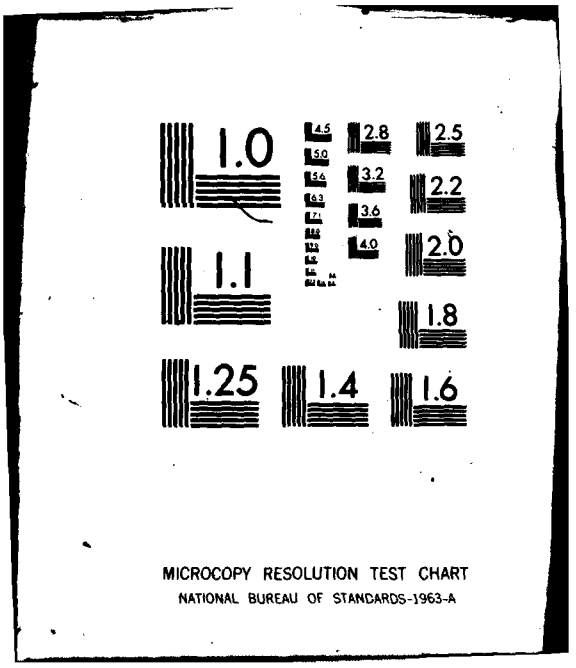
1.0
1.1
1.25
1.4
1.6
1.8
2.0
2.2
2.5
2.8
3.2
3.6
4.0
4.5
5.0
5.6
6.3
7.1
MICROCOPY RESOLUTION TEST CHART
NATIONAL BUREAU OF STANDARDS-1963-A

LEVEL II

(2)

NAVAL POSTGRADUATE SCHOOL

Monterey, California

AD A092278

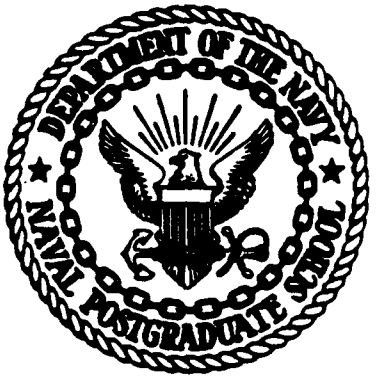

DTIC
ELECTE
DEC 2 1980
S D
C

(9) Master's

THESIS

(6) EXCHANGE SERVICE STATION
GASOLINE PUMPING OPERATION SIMULATION

by

(10) James Francis Henn

(12) 132

(11) Jun[redacted]80

Thesis Advisor: E. F. Roland

Approved for public release; distribution unlimited

DDC FILE COPY

251450

8011 24 072

Unclassified
SECURITY CLASSIFICATION OF THIS PAGE (When Data Entered)

REPORT DOCUMENTATION PAGE	READ INSTRUCTIONS BEFORE COMPLETING FORM
1. REPORT NUMBER	2. GOVT ACCESSION NO. AD-A092278 / 3. RECIPIENT'S CATALOG NUMBER
4. TITLE (and Subtitle) Exchange Service Station Gasoline Pumping Operation Simulation	5. TYPE OF REPORT & PERIOD COVERED Master's Thesis June 1980 / 6. PERFORMING ORG. REPORT NUMBER
7. AUTHOR(s) James Francis Henn	8. CONTRACT OR GRANT NUMBER(s)
9. PERFORMING ORGANIZATION NAME AND ADDRESS Naval Postgraduate School Monterey, California 93940	10. PROGRAM ELEMENT, PROJECT, TASK AREA & WORK UNIT NUMBERS
11. CONTROLLING OFFICE NAME AND ADDRESS Naval Postgraduate School Monterey, California 93940	12. REPORT DATE June 1980 / 13. NUMBER OF PAGES 131
14. MONITORING AGENCY NAME & ADDRESS(if different from Controlling Office)	15. SECURITY CLASS. (of this report) Unclassified / 15a. DECLASSIFICATION/DOWNGRADING SCHEDULE

16. DISTRIBUTION STATEMENT (of this Report)
Approved for public release; distribution unlimited.

17. DISTRIBUTION STATEMENT (of the abstract entered in Block 20, if different from Report)

18. SUPPLEMENTARY NOTES

19. KEY WORDS (Continue on reverse side if necessary and identify by block number)
Event Step Simulation
Exchange Service Stations
Simulation

20. ABSTRACT (Continue on reverse side if necessary and identify by block number)
This thesis presents an event step simulation model of the Naval Postgraduate School Exchange Service Station gasoline pumping operation. The model has been developed as a management tool and aid to decision making. The environment in which the system operates is discussed and the significant variables which can and cannot be controlled by management are identified. Data includes information pertaining to arrival rates, service times and ratios of vehicles requiring different gasoline grades. The data are →

DD FORM 1 JAN 73 1473 (Page 1)
EDITION OF 1 NOV 65 IS OBSOLETE
S/N 0102-014-6601

Unclassified
SECURITY CLASSIFICATION OF THIS PAGE (When Data Entered)

analyzed through parametric and nonparametric statistical techniques to develop the appropriate distributions to be used for random sampling during simulation. The assumptions made during model development are thoroughly discussed. Conclusions and recommendations concerning the model and its use are made based on the assumptions and the data, and statistical analysis thereof.

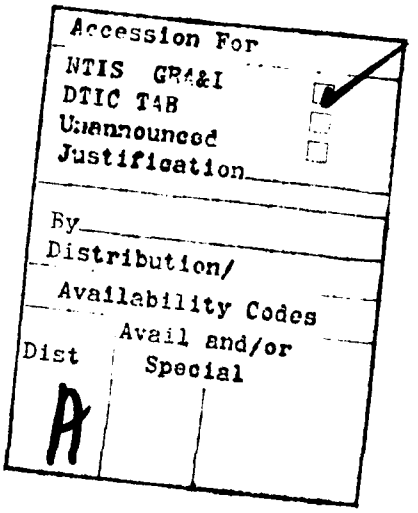

Approved for public release; distribution unlimited

Exchange Service Station Gasoline Pumping Operation Simulation

by

James Francis Henn
Major, United States Army
B.A., University of South Florida, 1975
M.A., Pepperdine University, 1978

Submitted in partial fulfillment of the
requirements for the degree of

MASTER OF SCIENCE IN MANAGEMENT

from the

NAVAL POSTGRADUATE SCHOOL
June 1980

Author James F Henn

Approved by: Ellen F. Boland
Thesis Advisor

Robert B Cunningham
Second Reader

Chairman, Department of Administrative Sciences

Dean of Information and Policy Sciences

ABSTRACT

This thesis presents an event step simulation model of the Naval Postgraduate school Exchange Service Station gasoline pumping operation. The model has been developed as a management tool and aid to decision making. The environment in which the system operates is discussed and the significant variables which can and cannot be controlled by management are identified. Data includes information pertaining to arrival rates, service times and ratios of vehicles requiring different gasoline grades. The data are analyzed through parametric and nonparametric statistical techniques to develop the appropriate distributions to be used for random sampling during simulation. The assumptions made during model development are thoroughly discussed. Conclusions and recommendations concerning the model and its use are made based on the assumptions and the data, and statistical analysis thereof.

TABLE OF CONTENTS

I. INTRODUCTION ---------- 8

II. SYSTEM ENVIRONMENT ---------- 12

III. DATA COLLECTION AND ANALYSIS ---------- 20

A. INTERARRIVAL TIME DATA ---------- 21

B. SERVICE TIME DATA ---------- 30

C. CONSUMPTION BY TYPE ---------- 46

IV. MODEL ASSUMPTIONS ---------- 49

V. PROGRAM RUNNING INSTRUCTIONS ---------- 57

VI. CONCLUSIONS AND RECOMMENDATIONS ---------- 63

APPENDIX A: PROGRAM VARIABLE DEFINITIONS ---------- 67

APPENDIX B: PROGRAM VERBAL FLOW ---------- 80

APPENDIX C: FLOWCHARTS ---------- 100

APPENDIX D: SAMPLE OUTPUT ---------- 113

APPENDIX E: PROGRAM LISTING ---------- 116

BIBLIOGRAPHY ---------- 130

INITIAL DISTRIBUTION LIST ---------- 131

LIST OF TABLES

I. Frequencies of Interarrivals by 15 Second Time Intervals- 24

II. Arrivals by Half Hour, 0900 to 1330 Hours ---------- 25

III. Arrivals by Half Hour, 1000 to 1330 Hours ---------- 26

IV. Frequency Distribution of Interarrival Times ---------- 29

V. Service Time Data Groupings ---------- 34

VI. Significance of Differences for Mean Service Times ------ 40

VII. Goodness of Fit - Service Time Data (All) ---------- 42

VIII. Goodness of Fit - Service Time Data ---------- 42

IX. Chi-Square Test of Service Time Distribution ---------- 45

X. Kolmogorov-Smirnoff Test of Service Time Distribution --- 45

XI. Consumption versus Number of Purchases by Type ---------- 48

LIST OF FIGURES

1. Station Location ---------- 14
2. Existing Lane Configuration ---------- 16
3. Future Lane Configuration ---------- 17
4. Interarrival Time Histogram ---------- 28
5. Histograms for Unleaded Data ---------- 35
6. Histograms for Low Lead Data ---------- 36
7. Histograms for Premium Data ---------- 37
8. Cumulative Distribution Function of Service Times ------ 47

I. INTRODUCTION

A major objective of the Naval Postgraduate School Exchange Service Station is to provide efficient service for the vehicles which come for refueling. The primary measure of effectiveness which can be used to measure the efficiency of the gasoline pumping operations is the amount of time after arrival a patron can expect to wait before the servicing of his vehicle begins. There are many factors which interact to influence this waiting time. The number of pumps available, the configuration of the service islands, the type of service being provided (full, mini, self, etc.), the arrival rate of vehicles, the service time required for each vehicle and the demand for different gasoline grades are some of the significant factors. This is a dynamic system with all variables subject to change over time. Little or no control can be exercised over some of the variables such as arrival rates; while others are primarily controlled by managerial decision making, for example the number of pumps available and the grades of gasoline dispensed from each.

Another gasoline service island will be added at the Exchange Service Station in the near future. The decisions on the installation of the new island and piping modifications for rearrangement of the gasoline grades to be dispensed at the different pumps have been made. These decisions were

based on sound managerial judgement and limited, but good, analysis of a few variables. Limited time was available to do a detailed analysis of all the significant factors as a narrow time constraint existed for completing the contract and advertising for bids. Although this study was not undertaken to second guess the decisions that were firm, use of the current and proposed systems in testing the model demonstrate that the decisions made are sound.

The reason for this study is to make available to the Exchange Officer and the Service Station Manager an event step simulation model of the gasoline pumping operations which can be utilized as a sophisticated management tool and aid to decision making. With construction of the new island and modification to the piping system, flexibility in the dispensing of different grades at various pumps will be expanded. As the uncontrollable variables in the environment change, the simulation model developed in this study will provide management with an easy to use tool for analyzing the many viable options available.

The model that has been developed is quite general in nature and not limited to application at the Naval Postgraduate School Exchange Service Station. Factors such as the number of lanes, number of pumps available in each service lane, arrival rates and service time parameters are all variables which can be changed at will to explore various options and

changes in the operating environment. The model has been written in such a manner to easily facilitate future modifications for exploring conditions or options not currently being considered.

Chapter II describes the gasoline pumping operations of the Exchange Service Station as it currently exists and as it is anticipated to operate after construction of the new island and piping modifications. This allows insight into the service arrangement options presently available and those that will be available. An understanding of the physical layout is important to the visualization and understanding of any model.

Data collection and analysis are discussed in Chapter III. The three sections of this chapter develop the inter-arrival time, the service time and the fuel type distributions used in modelling the Exchange Service Station. The important aspect of the chapter is the manner in which the data is collected, reduced and analyzed in order to input variables into the model which will provide a realistic representation of the particular system being examined.

Chapter IV is a discussion of the assumptions which have been made in developing the model. Knowledge of the underlying assumptions is essential for understanding the consequent uses and limitations of the model.

Chapter V provides the running instructions for the program. This includes a detailed discussion of each input variable and how it is used and a discussion of the output results for a test run.

Conclusions and recommendations concerning model application are provided in Chapter VI. The discussion focuses on the variables which can be input into the model and the measurements provided by the simulation.

The appendices fully document the event step computer simulation program which has been written in SIMSCRIPT II.5. Appendix A is a definition of the variables used in the program; Appendix B is a detailed verbal description of the model; Appendix C contains flowcharts of the model; Appendix D is sample output; and, Appendix E is the program listing. The verbal flow and flowcharts are keyed by line number to the program listing for easy reference.

II. SYSTEM ENVIRONMENT

The Navy Exchange Service Station is located along the northern perimeter of the Naval Postgraduate School between Del Monte Lake and the Exchange Outdoor/Garden store. There are two entrances to the station. The main entrance is from Lake Drive, opposite the Main Exchange parking lot, and is for the customers desiring service other than refueling (see Figure 1). This serves as the avenue of departure for all customers. The second entrance is for the customers desiring to use the gasoline pumps. This entrance is the one-way street running east from the Del Monte Gate and paralleling the northern perimeter fence. The gasoline traffic turns south from this street, near the northwest corner of Del Monte Lake, into the queuing area for all the gasoline service lanes. This street also serves as an extension of the queuing area when the length of the queues dictates.

The gasoline pumping operation hours differ slightly from the remainder of the station in that the pumps are nonoperational during part of the normal operating day. The entire station is closed on Sunday and Monday. From Tuesday through Friday, the pumps are open for an hour each morning, 0730 - 0830, for the convenience of those personnel desiring to service their vehicles on the way to work, and then from 1030 until 1700 hours. On Saturday the pumps are open from 0900 until 1700 hours.

The pumps are closed early whenever the daily allocation of gasoline has been sold. The daily allocation is the total combined quantity in gallons of all grades of gasoline sold and is determined by the monthly allocation being divided by the number of operating days in the month. Therefore the daily allocation changes on a monthly basis but remains fixed during the month. The allocation factor is not considered in the model as it is not a variable affecting the efficiency with which vehicles are processed through the system. The allocation factor simply affects the number of vehicles which can be serviced each day.

Currently, there are 3 gasoline service islands providing 6 service lanes (see Figure 2). Each lane is capable of servicing 2 vehicles simultaneously and 2 lanes each dispense unleaded, low lead and premium gasoline. The station currently provides "mini" service. Mini service differs from self service in that the station attendants provide auxillary services, such as cleaning windows and checking oil, in addition to handling the payment transaction. The attendants also pump the gasoline for handicapped persons and anyone else who requests that assistance. The islands are not equipped with water and air hoses so those services are not provided. They are offered at a separate service area.

FIGURE 1

STATION LOCATION

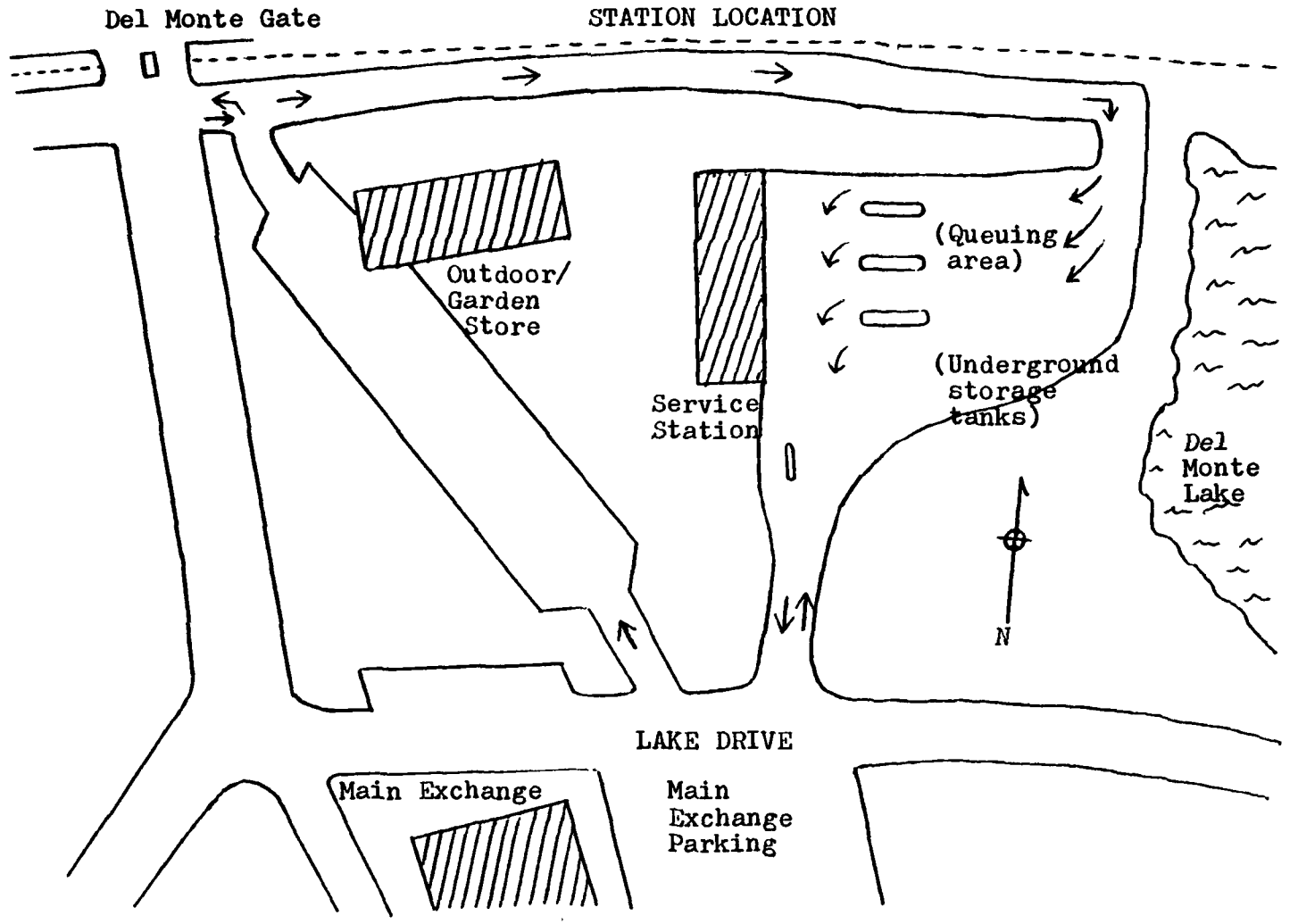

In the near future a fourth gasoline service island will be added. The new island will be adjacent to and to the south of the existing islands (see Figure 3). A major difference between the new island and the existing islands is that the new island will have 3 pumps instead of 2. However, due to spacing limitations, the island will be no larger than the others and thus only 2 vehicles will be able to be serviced simultaneously. Extending the island forward (toward the garage) would interfere with the traffic pattern for exiting the station while extending the island rearward (toward the lake) interferes with the servicing of the underground storage tanks. Placing the new island at an angle to the existing islands, instead of parallel, does not solve the storage tank interference problem nor is adequate space available to install the island to the north of the existing islands. Therefore, size and placement of the island is dictated by physical constraints.

An examination of Figures 2 and 3 show that modifications to the piping system are also being made which will not only change the current arrangement by gasoline grade, but add much flexibility, if desired, for future rearrangement. The 2 northern most lanes (1 and 2), which are currently unleaded lanes, will become premium lanes. The possibility exists for them to be used as either unleaded or premium when considering

FIGURE 2

EXISTING LANE CONFIGURATION

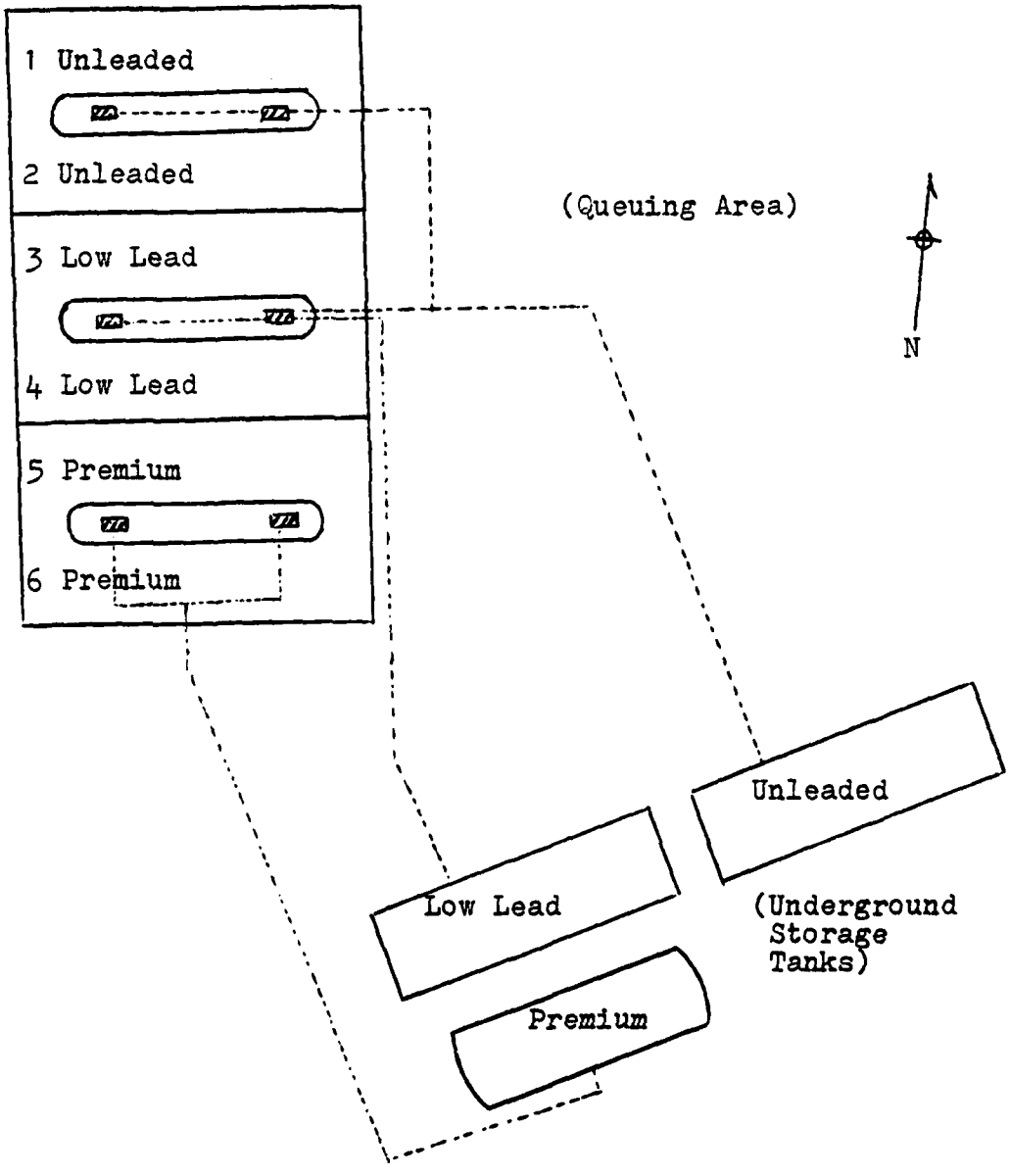

FIGURE 3

FUTURE LANE CONFIGURATION

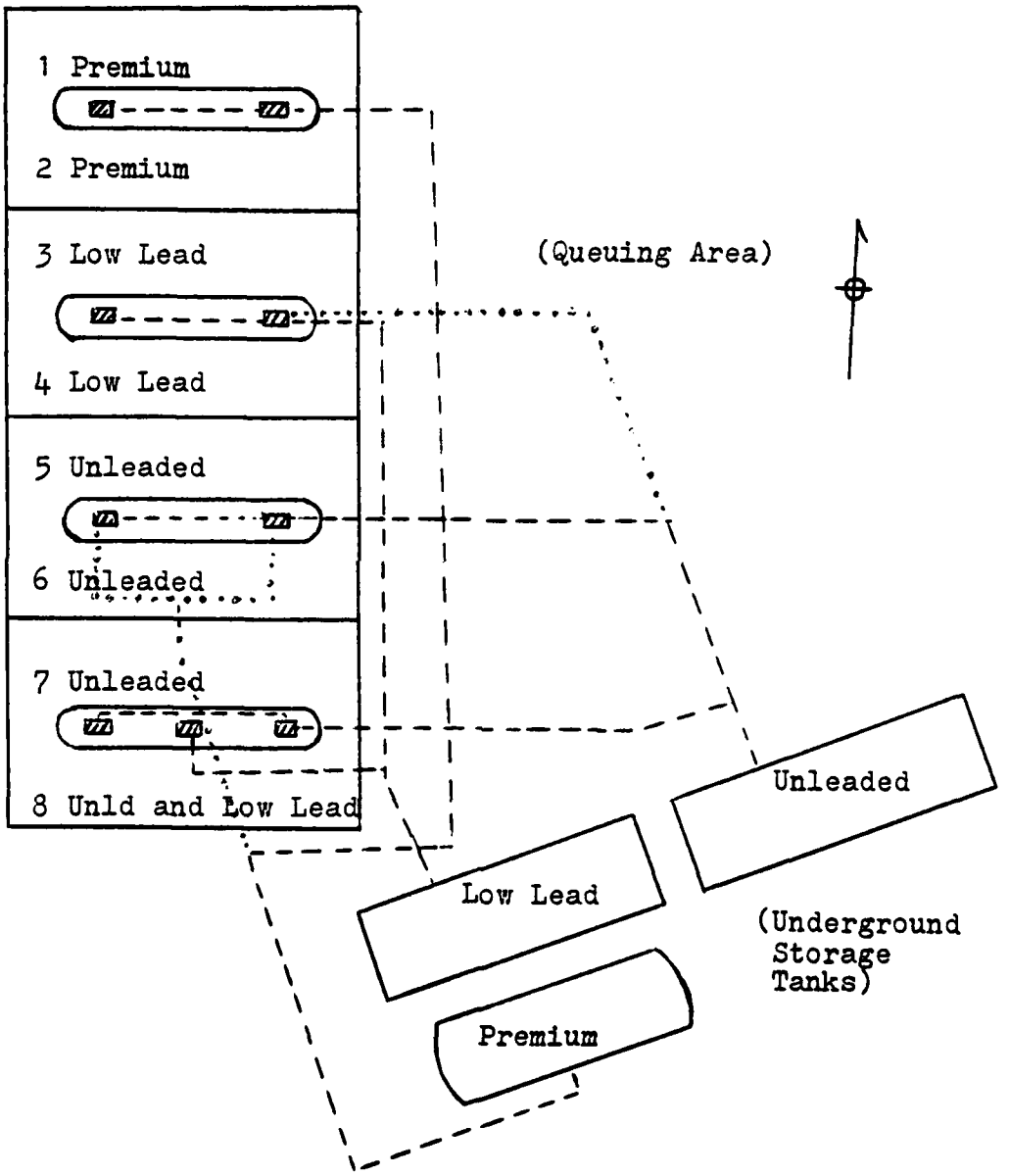

any rearrangement. The current middle lanes (3 and 4) will remain low lead with the last pump having the capability of dispensing any of the three grades. The current southernmost lanes (5 and 6) will become unleaded lanes but will retain the capability of being easily converted back to premium. The two new lanes (7 and 8) will have a unique arrangement. The first and last pumps will dispense unleaded gasoline for each lane while the middle pump will dispense low lead gasoline to the southernmost lane (8) only. The middle pump will not be utilized at lane 7, in effect, making it a 2-pump lane. The reason for this is that lanes 1 through 7 will be self service (mini service), as currently provided, while full service will be provided at lane 8. In summary, there will be 3 unleaded, 2 low lead and 2 premium 2-pump self service lanes and one 3-pump full service lane dispensing unleaded and low lead gasoline.

It is not considered practical to have a self service lane that dispenses more than one grade of gasoline. Vehicles requiring the grade dispensed at the latter pump will frequently prevent utilization of the forward pump to vehicles in the queue requiring the grade dispensed at the forward pump. Likewise, when the forward pump is busy and the next vehicle to be serviced requires the gasoline dispensed at the forward pump, other vehicles in the queue are prevented

from using the idle latter pump. This type of blocking does not occur when all pumps of a lane dispense the same grade. Whenever the pumps become available to the vehicles in the queue, the first vehicle will go to the first pump allowing another vehicle to leave the queue for servicing at the latter pump. Stopping at the latter pump when the forward pump is open or waiting for the forward pump when the latter is open does not occur in this situation.

III. DATA COLLECTION AND ANALYSIS

As with most queuing systems, the operating characteristics of the gasoline pumping operations of the Naval Postgraduate School Exchange Service Station are largely determined by two statistical properties, the probability distribution of interarrival times and the probability distribution of service times. Data collection, therefore, was aimed at obtaining sufficient information concerning those actual distributions in order to develop a model that will provide reasonable predictions about the system operation as various parameters are changed. With the primary measure of effectiveness being to minimize the time that a customer must wait after arrival until service begins on his vehicle, the goal for interarrival times was to collect data during peak periods so that the system could be examined under stress conditions. Service times were assumed to be independent of the arrival rates and therefore it was not considered essential to collect service time data only during peak periods. Additionally, this assumption of independence justified the separate collection of the interarrival time data and the service time data. The number of vehicles purchasing each gasoline type was also sampled. This sample was used to test the hypothesis that the percentage of gasoline (gallonage) sold by type is equal to the percentage of vehicles purchasing a given type of gasoline.

Interviews with Commander Neale W. Evans, NPS Exchange Officer, and Mr. Don Iosty, Service Station Manager, revealed that Saturdays, when the odd-even plan is not observed, is probably the most active day for the gasoline pumping operations. Tuesdays, with the service station having been closed the previous two days, and Fridays, with vehicles apparently being prepared for weekend activities, were also cited as highly active days. The first half hour, from 0730 to 0800 hours, and the noon period were identified as the busiest time periods during the day. CDR Evans and Mr. Iosty indicated that neither had observed any noticeable increase in gasoline pumping activities the day of or the day following military paydays. With this information in mind it was decided to obtain interarrival time data on Saturday, 15 March 1980, which happened to be a day following a military payday. Service time data was obtained for unleaded gasoline on Saturday, 15 March; Tuesday, 18 March; Friday, 21 March; and, Saturday, 22 March. Service time data for low lead and premium gasoline were obtained on Tuesday, Friday and Saturday the 18th, 21st and 22nd of March 1980.

A. INTERARRIVAL TIME DATA

Data for interarrival times were obtained during the period from 0900 hours, when the pumps were opened, until approximately 1330 hours, 15 March, when the pumps were

closed as a result of the daily allocation having been exceeded. During this 4½ hour time period a total of 482 vehicles arrived to obtain gasoline. Two vehicles arrived prior to the 0900 hour opening and thus were not included in this analysis. The interarrival time for the first vehicle was based on the 0900 hour opening. The time of arrival, to the nearest second, was recorded for each vehicle utilizing a digital watch. Times of arrival were recorded in the following manner. If there was no queue for the lane that the vehicle chose, allowing him to drive immediately to the pump at which the vehicle would be serviced, the time of arrival was recorded at the moment the vehicle stopped at the pump. If there was a queue for that lane or if the vehicle could not enter the pump area (thus had to become the first vehicle in the queue), the time of arrival was recorded at the moment the vehicle drove up to and first stopped as a member of the queue. Therefore a vehicle's time of arrival is associated with the number of vehicles being serviced or waiting to be serviced rather than with the passing of a particular physical location. This method precludes any attempt to measure driver decision time, as it is included in the interarrival time, and closely resembles the instantaneous manner in which the simulation begins a vehicle's service or enters it in a queue.

During this phase of data collection, the researcher was positioned to the rear of the gasoline pumping area, beyond the queuing area, where all lanes could be clearly observed. The researcher was also able to observe vehicles entering from either direction as many customers still enter the gasoline servicing area from the south entrance by the main exchange instead of by the one-way street to the north of the service station as the signs direct.

The initial step in the analysis of interarrival time data was to obtain a frequency count on the number of vehicles arriving during specified time intervals so as to get a general picture of the distribution to be estimated. Frequencies were obtained for 15 second intervals as shown in Table I. The general picture exhibited by the frequency distribution shown in Table I is that of the exponential distribution which is common to most time between customer arrival situations.

TABLE I.

FREQUENCIES OF INTERARRIVALS BY 15 SECOND TIME INTERVALS

Interval	Frequency
0- 15	190
16- 30	107
31- 45	82
46- 60	37
61- 75	23
76- 90	11
91-105	10
106-120	7
121-135	3
136-150	1
151-165	1
166-180	4
181-195	2
196-210	0
211-225	0
226-240	1
241-255	0
256-270	0
271-285	3
> 285	0
TOTAL	482

The next step in the analysis of interarrival times was to determine the peak period arrival rate then estimate the appropriate distribution of interarrivals during that peak period. Given an exponential distribution for interarrival times, the average number of arrivals during a specified time frame will be uniform. Therefore a frequency count of arrivals for one-half hour time frames, during the 4½ hours of operation on 15 March, was obtained as shown in Table II.

This breakdown yielded an average arrival rate per one-half hour of 53.56. A Chi-Square Goodness-of-Fit test was utilized to test the hypothesis that the expected number of arrivals per one-half hour was 53.56 versus the alternate hypothesis that the expected number was not 53.56. A .05 level of significance was used with the degree of freedom being equal to 8. The critical value of $X^2_{.05;8}$ is 15.51 [5]. The computed X^2 statistic for the data was 52.25, therefore the null hypothesis was rejected at the .05 level of significance.

TABLE II.

ARRIVALS BY HALF HOUR, 0900 TO 1330 HOURS

	Time Period		Frequency
1.	0900-0929	.....	22
2.	0930-0959	.....	23
3.	1000-1029	.....	74
4.	1030-1059	.....	64
5.	1100-1129	.....	62
6.	1130-1159	.....	69
7.	1200-1229	.....	57
8.	1230-1259	.....	53
9.	1300-1329	.....	58
		TOTAL	482

$E(x) = 482/9 = 53.56$

H_o: $E(x) = 53.56$
H_1: $E(x) \neq 53.56$

Critical value of $X^2_{.05;8} = 15.51$

$X^2 = 52.25$

Reject H_o

Visual inspection of the data revealed that the first hour of operation was not nearly as active as the remaining 3½ hours. The arrivals for the first 2 one-half hour periods of operation were only 22 and 23, respectively, while the remaining half-hour periods ranged from 53 to 74 arrivals. Thus the first

hour of operation was dropped from the analysis of arrivals and the Chi-Square Goodness-of-Fit test was used to test the hypothesis that the expected number of arrivals per one-half hour was 62.43 versus the alternate hypothesis that the expected value was not 62.43 (see Table III). The level of significance was again set at .05 with the number of degrees of freedom being reduced to 6, since 2 time periods had been dropped. The critical value of $X^2_{.05;6}$ is 12.59 [5]. The computed X^2 statictic for this test was 5.09, therefore the null hypothesis could not be rejected. A X^2 statistic of 5.09 with 6 degrees of freedom does not become significant until approximately the .53 significance level thus indicating that a fairly good fit has been found.

TABLE III.

ARRIVALS BY HALF HOUR, 1000 TO 1330 HOURS

Time Period		Frequency
1.	1000-1029	74
2.	1030-1059	64
3.	1100-1129	62
4.	1130-1159	69
5.	1200-1229	57
6.	1230-1259	53
7.	1300-1329	58
	TOTAL	437

$E(x) = 437/7 = 62.43$

H_o: $E(x) = 62.43$
H_1: $E(x) \neq 62.43$

Critical value of $X^2_{.05;6} = 12.59$

$X^2 = 5.09$

Do not reject H_o

It was thus determined that the period from 1000 to 1330 hours on Saturday, 15 March represented the peak period from which the interarrival time distribution should be determined and used in modeling the gasoline pumping operations. To that extent a histogram of the 437 interarrival times for that period was constructed (see Figure 4) obtaining a frequency count of the interarrivals by 15 second time intervals. The histogram exhibits an obvious exponential distribution. Utilizing the probability distribution function of the exponential distribution, with the sample mean of 28.51 seconds as an estimate of the population mean, the expected frequencies for the time interval breakdown in Figure 2 was determined. These observed and expected frequencies were used to conduct a Chi-Square Goodness-of-Fit test on the hypothesis that the population mean is 28.51 seconds versus the alternate hypothesis that it is not 28.51 (see Table IV). The intervals from 120 seconds and greater were combined so that no more than 20% of the cells would have an expected frequency of less than 5 [5]. Therefore the number of cells for the Chi-Square test was limited to 9. A .05 level of significance was utilized with the number of degrees of freedom being equal to 8. The critical $X^2_{.05;8}$ value is 15.51 [5]. The computed X^2 statistic for this test was 8.18, therefore the null hypothesis could not be rejected. The X^2 statistic of 8.18

FIGURE 4

INTERARRIVAL TIME HISTOGRAM

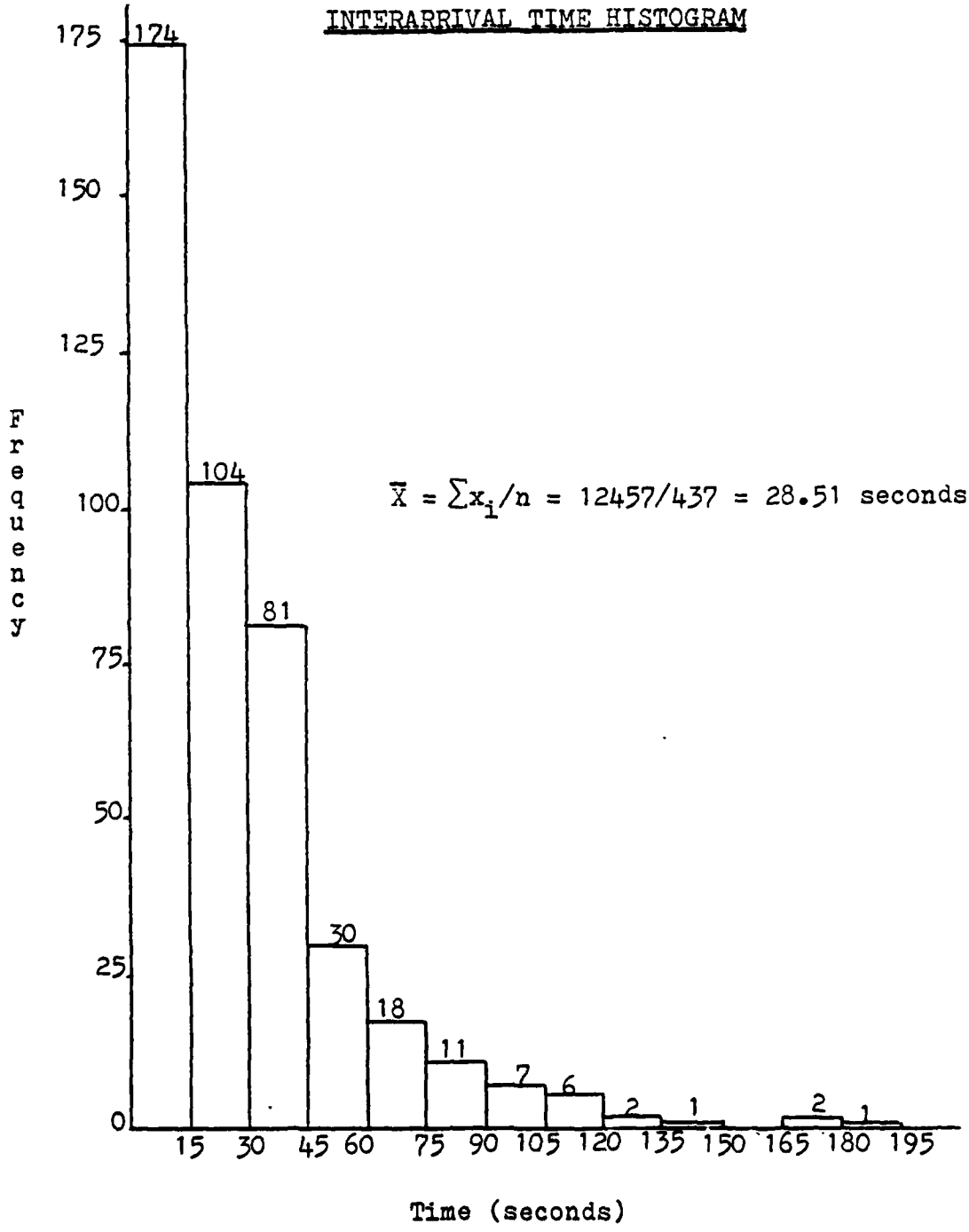

$\bar{X} = \sum x_i / n = 12457/437 = 28.51$ seconds

with 8 degrees of freedom does not become significant until the .42, approximately, significance level is reached indicating, once again, that a fairly good fit of the distribution for interarrival times during peak periods has been found.

TABLE IV.

FREQUENCY DISTRIBUTION OF INTERARRIVAL TIMES

Interval (seconds)		Observed Frequency	Expected Frequency
1.	0- 14	174	170
2.	15- 29	104	109
3.	30- 44	81	65
4.	45- 59	30	38
5.	60- 74	18	22
6.	75- 89	11	13
7.	90-104	7	8
8.	105-119	6	5
9.	120	6	7
	TOTAL	437	437

$E(x) = 1 - e^{-x/\mu}$

H_0: the observed and expected distributions are the same.

H_1: they are not the same.

Critical value of $X^2_{.05;8} = 15.51$

$X^2 = 8.18$

Do not reject H_0

Based on the preceding analysis it was concluded that an exponential distribution with a mean of 28.51 seconds would be used in the simulation model of the gasoline pumping operations when obtaining random variables to represent vehicular arrivals. This distribution should closely represent the actual arrival patterns at the service station.

B. SERVICE TIME DATA

Data for service times was collected on several days as previously indicated. The data was collected with the idea of testing the following hypotheses and determining the appropriate probability distribution(s) to be used in the simulation model. First, it was hypothesized that there was a difference in service time according to the type of gasoline being obtained. The basis for this hypothesis was that average tank capacities for vehicles utilizing different types of gasoline might be different, therefore taking longer, on the average, to fill vehicles obtaining a certain type of gasoline. For example, it seemed plausible that the majority of vehicles obtaining premium gasoline would be the older large model cars with greater tank capacities than the newer medium and compact vehicles which utilize unleaded gasoline. The second hypothesis to be examined was that service time during nonpeak periods is greater than service times during peak periods. The basis for this hypothesis was that the customer and the service station attendants might be prone to take their time and provide additional servicing (wash windows, check oil, etc.) when no other vehicles are waiting while the tendency would be to not waste time and provide minimum services when other vehicles are waiting to be serviced.

For this phase of the data collection, the researcher was stationed inside one of the several bays of the service station

in front of the gasoline island for which the service times were being recorded. This position afforded the researcher an unobstructed, elevated view of the service area so that times could be accurately recorded. Additionally, by being inside the service bays, the researcher was not readily apparent to the customers and station attendants servicing the vehicles. The data collection process therefore had a minimal effect upon the normal servicing of the vehicles.

The time service began and ended for each vehicle was recorded to the nearest second utilizing a digital watch. Service times were recorded as follows. If a vehicle was entering the service area directly without having to wait in a queue, the service start time was recorded at the moment the vehicle stopped at the pump at which it would be serviced. Likewise, when a vehicle's servicing had been completed and it could leave without having to wait for another vehicle at a pump in front of him, which had him blocked, the service time was recorded at the moment the vehicle began to drive away. If the vehicle that was ready to depart was blocked from doing so, the departure time was recorded as the time the customer reentered his vehicle to depart plus the researcher's judgement as to how long it would take to start the vehicle and begin the departure. Thus the service time represents the entire time that the pump was unavailable to

service another vehicle and includes the time to exit the vehicle after arriving at the pump, all services performed while at the pump, time to conduct the payment transaction, and time to reenter and start the vehicle for departure from the service area. Specifically, it does not include the time a vehicle has to wait to leave the service area due to being blocked.

The service time is slightly more inclusive when the vehicle is coming out of the queue to be serviced rather than driving directly up to the pump without having to wait in the queue. The service start time for a vehicle coming out of the queue was recorded as the service ending time for the vehicle in the service area whose departure is now opening up the pump(s) for a vehicle(s) in the queue. For example, assume that there are two vehicles in the queue for a certain lane and that both pumps for that lane have vehicles at them. The vehicle at the second pump has completed his servicing but is blocked from departing. The service ending time for that vehicle is recorded as described above. When the vehicle at the first pump completes servicing and begins to depart, both pumps for that lane will become available and the two vehicles in the queue will leave the queue and begin servicing. Therefore their service beginning time corresponds with the service ending time for the vehicle at the first pump.

Thus, in these situations, the service time includes the time it takes for the vehicles to come out of the queue and drive up to the pumps as well as the other activities included in the service time as described above. Inclusion of this time is justified by the fact that the vehicles in the queue are already at the service station waiting to be serviced and therefore coming out of the queue belongs to their service time. It is important that this time be accounted for in accurately simulating the gasoline pumping operation. If this time is not accounted for in the manner described the simulation model would have to be unnecessarily complicated by collecting data separately and determining a distribution to be used for modeling the time it takes vehicles to come out of the queue and drive up to the pumps. There is little to be gained by modeling this activity separately rather than including it in the service time.

A total of 999 service times were obtained as shown in Table V. Histograms for these various data groupings were constructed (see Figures 5, 6 and 7) utilizing 30 second time intervals. A visual inspection of the histograms indicate that they have the same general distribution.

TABLE V.

SERVICE TIME DATA GROUPINGS

Type of Gasoline:	Period	$\bar{X}$ (seconds)	$S_{\bar{x}}$ (seconds)	n
Unleaded	Weekday	254.11	80.61	219
	Weekend	251.30	63.74	247
	Combined	252.62	72.07	466
Low Lead	Weekday	251.80	81.15	161
	Weekend	220.10	68.59	189
	Combined	234.68	76.18	350
Premium	Weekday	261.08	89.91	120
	Weekend	248.48	93.19	63
	Combined	256.74	90.99	183
TOTAL SAMPLE				999

During the data collection process, the researcher observed that the unleaded pumps were normally saturated, having a queue, regardless of the time of day or the day of the week. The low lead pumps were saturated during peak periods and remained fairly active with no, or only a small, queue the remainder of the time while the premium pumps seldom had a queue. Resultantly, the service time study focused on the unleaded pumps. A parametric t-test was used to examine the difference between the means of the unleaded weekday and weekend service times. A pooled estimate of the population variance was used for this test since the true population variance is unknown [4]. Additionally, due to the large sample sizes, the standard normal distribution tables were utilized rather than the t-distribution tables. It was not necessary to assume that the

FIGURE 5

HISTOGRAMS FOR UNLEADED DATA

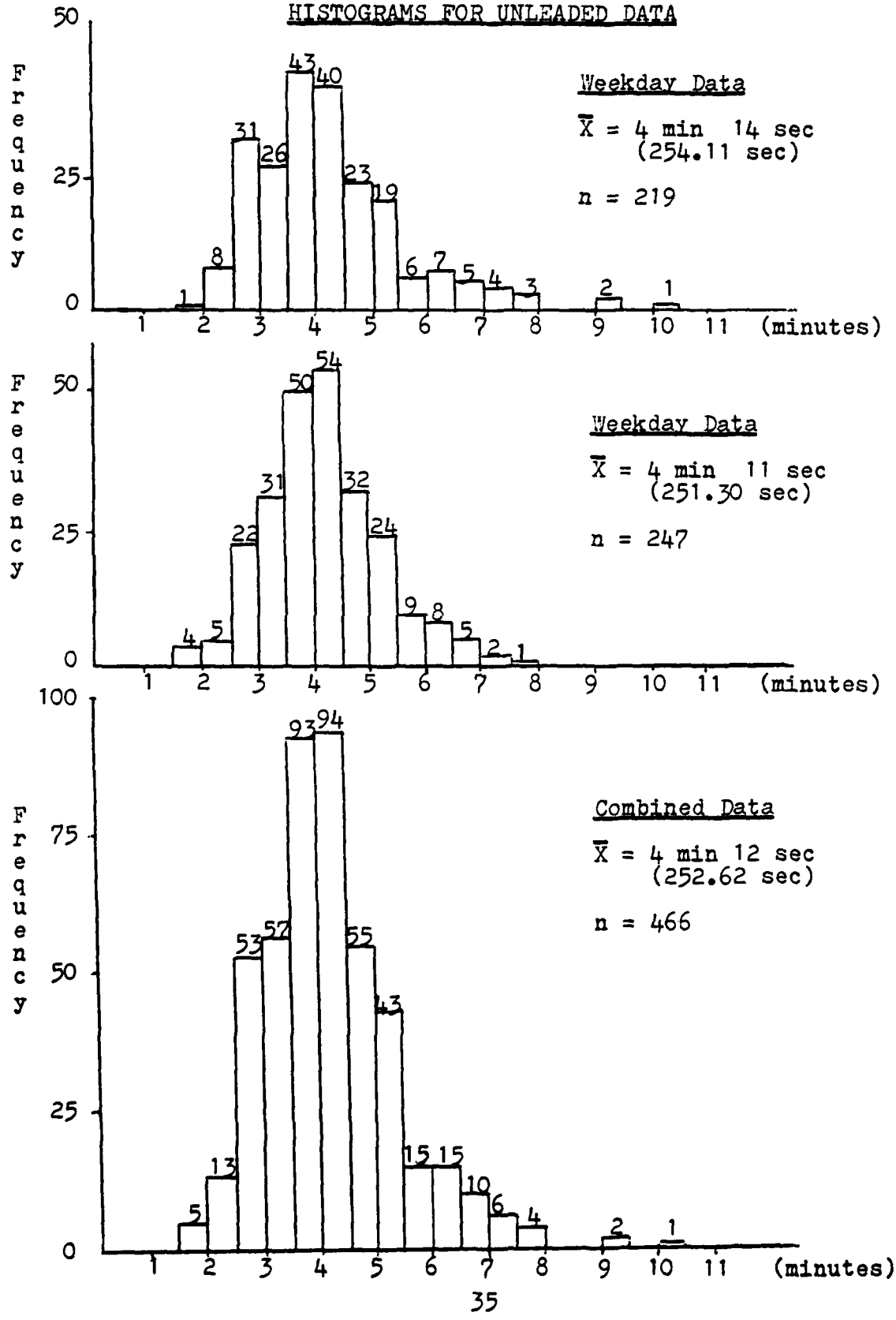

FIGURE 6

HISTOGRAMS FOR LOW LEAD DATA

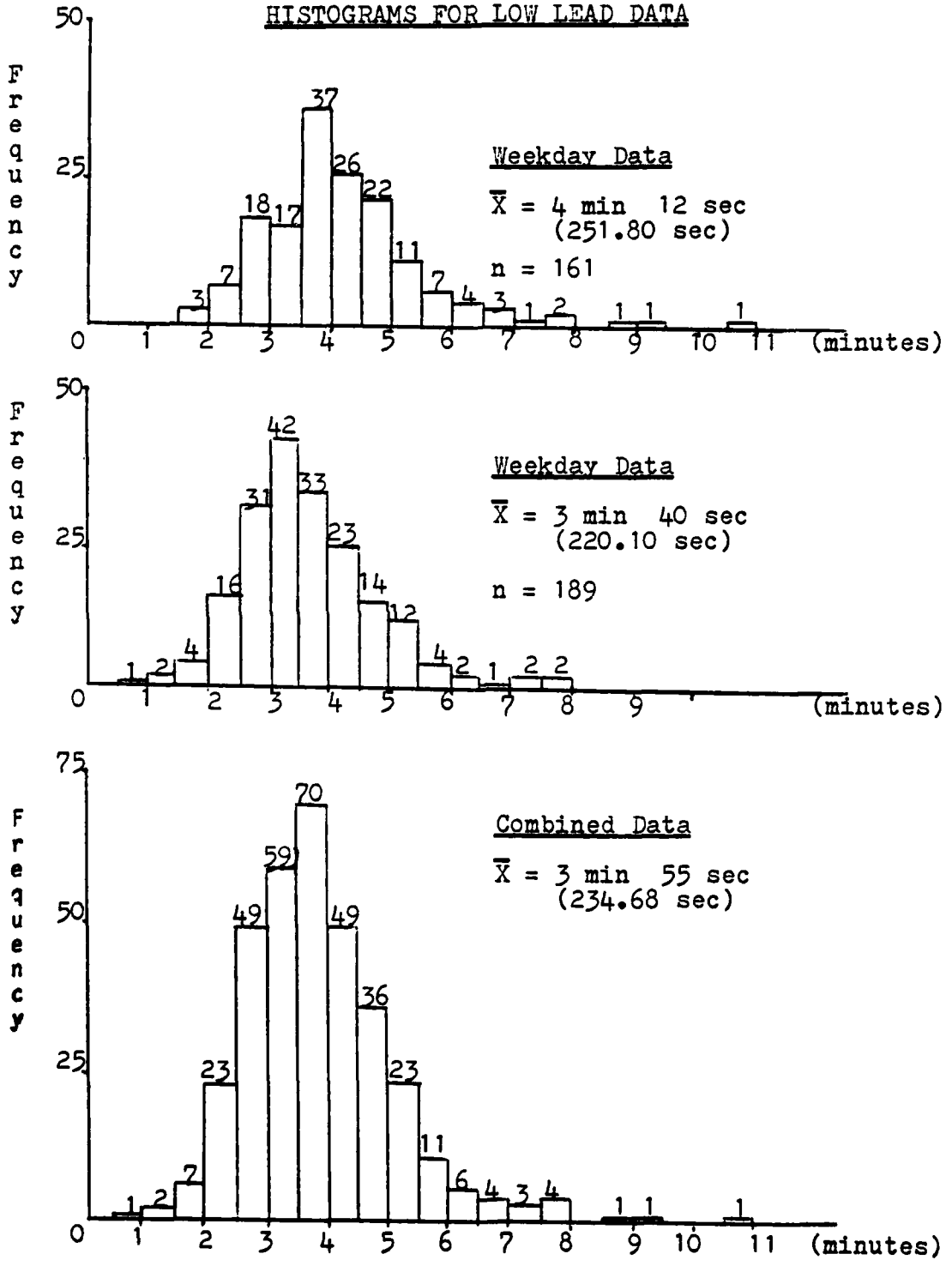

FIGURE 7

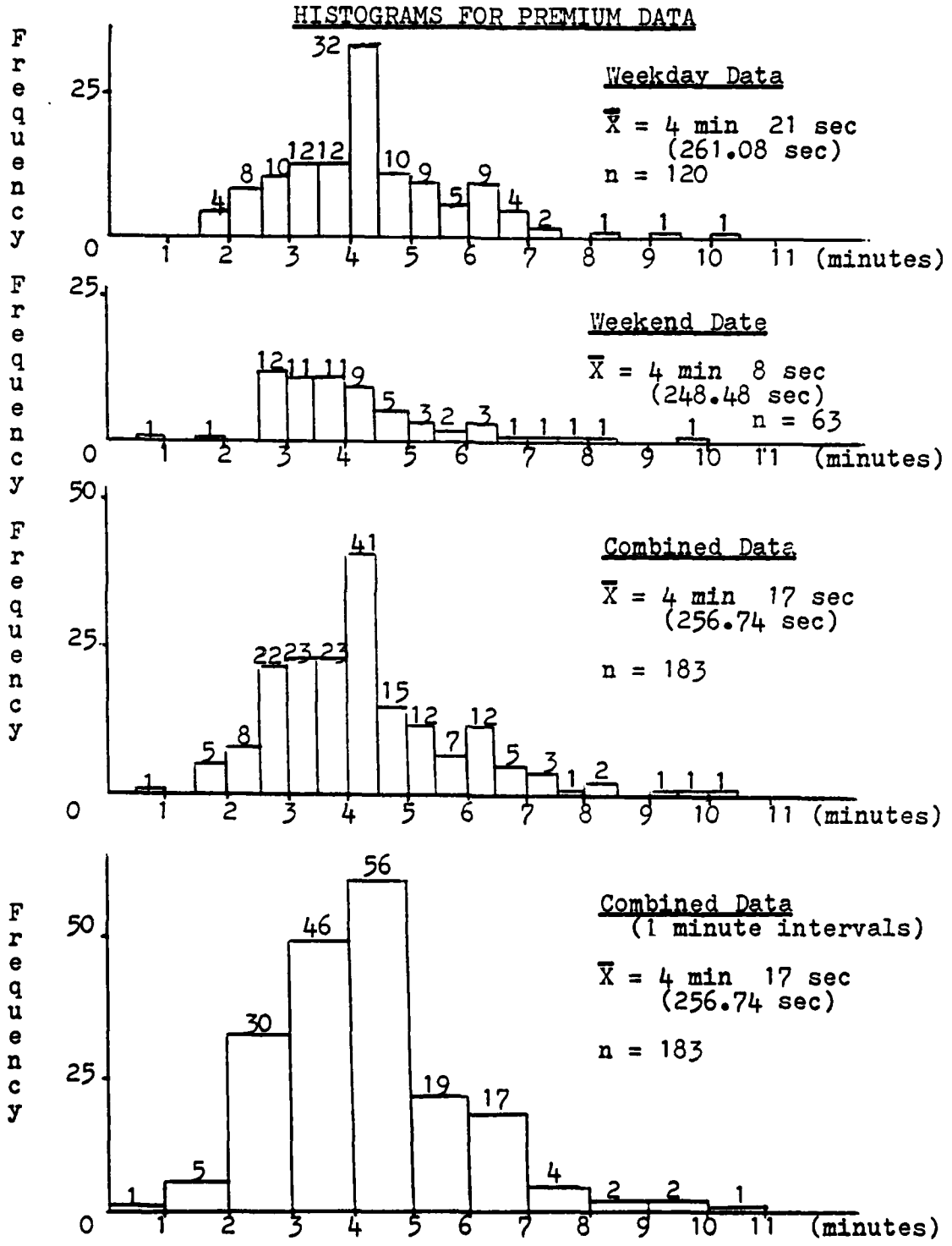
HISTOGRAMS FOR PREMIUM DATA
Frequency
Weekday Data
$\bar{X}$ = 4 min 21 sec
(261.08 sec)
n = 120
(minutes)
Weekend Date
$\bar{X}$ = 4 min 8 sec
(248.48 sec)
n = 63
(minutes)
Combined Data
$\bar{X}$ = 4 min 17 sec
(256.74 sec)
n = 183
(minutes)
Frequency
Combined Data
(1 minute intervals)
$\bar{X}$ = 4 min 17 sec
(256.74 sec)
n = 183
(minutes)

two population random variables were normally distributed since this method provides a satisfactory approximation when the sample sizes are both large (greater than 25 is usually considered satisfactory) [4]. The hypothesis was that the difference between the means of the unleaded weekday and unleaded weekend service times was 0 with the alternate hypothesis being that the difference was not 0. A .05 level of significance was utilized therby yielding a critical z value of 1.96 for this two-tailed test. The calculated Z was .42 which is not significant until approximately a .34 level of significance is called for. Therefore the null hypothesis could not be rejected and it became justifiable to use the combined unleaded data to estimate the appropriate distribution for modeling the unleaded service times.

As shown in Table VI., the above procedure was also utilized to test the significance of the differences between the weekday and weekend service times for all types of gasoline and then to test the difference between the mean service times of various combinations of the gasoline types. What this rigorous examination demonstrates is that only the low lead weekend data differs significantly from the remainder of the data as far as central tendency is concerned. It has already been shown by the histograms that all the data groupings have similiar shaped distributions.

The significant difference shown by the low lead weekend data came as no surprise. During the period of data collection one of the two nozzles on one of the low lead pumps was not working. Resultantly, only 3 vehicles instead of the usual 4 could be serviced at one time at the low lead island while the unleaded and premium islands had the capability of servicing 4 vehicles simultaneously. This was not a serious factor during the weekdays when the low lead island was not completely saturated and only one attendant per island was utilized to provide mini-service and handle payment transactions. Thus the low lead weekday service times were not significantly different from the unleaded and premium service times. However, this became a critical factor on the weekend when both the unleaded and the low lead islands were saturated and 2 attendants were used for each of these islands. The 2 attendants for the unleaded island were normally servicing 4 vehicles at a time while the 2 attendants for the low lead island were only servicing 3 customers at a time. The time customers had to wait to make payment after their vehicle had been serviced was noticeably less for the low lead island. The 2-1, customer to attendant, ratio at the unleaded island often led to a customer waiting to make payment after his vehicle was serviced while the 1.5-1 ratio at the low lead island usually resulted in the customer being able to make his payment transaction as soon as he was ready for it.

TABLE VI.

SIGNIFICANCE OF DIFFERENCES FOR MEAN SERVICE TIMES

	Std Dev (pooled)	Z Statistic	P(Z≥z)
Unleaded (weekday vs weekend)	... 72.16	.42	.34
Low Lead (weekday vs weekend)	... 74.36	3.975 *	<.001 *
Premium (weekday vs weekend)	... 91.04	.889	.19
Unleaded vs Low Lead (weekday vs weekday)	... 80.84	.276	.40
Unleaded vs Premium (weekday vs weekday)	... 84.01	- .73	.24
Low Lead vs Premium (weekday vs weekday)	... 85.00	- .91	.18
Unleaded vs Low Lead (weekend vs weekend)	... 65.89	4.9 *	<.001 *
Unleaded vs Premium (weekend vs weekend)	... 70.66	.283	.39
Low Lead vs Premium (weekend vs weekend)	... 75.44	-2.586 *	<.005 *
Unleaded vs Low Lead (combined vs weekday)	... 74.52	.121	.45
Unleaded vs Low Lead (combined vs weekend)	... 71.10	5.30 *	<.001 *
Unleaded vs Low Lead (combined vs combined)	... 73.88	3.43 *	<.001 *
Unleaded vs Premium (combined vs weekday)	... 76.06	11.086	.14
Unleaded vs Premium (combined vs weekend)	... 74.89	.412	.34
Unleaded vs Premium (combined vs combined)	... 77.87	- .606	.27

* denotes significance at the .05 level

H_0: $D = \mu_1 - \mu_2 = 0$

H_1: $D = \mu_1 - \mu_2 \neq 0$

Since all islands would normally be able to service 4 vehicles simultaneously, it was determined to eliminate the low lead weekend data from the analysis of the service time

distributions. Further, it was now possible to assume that the service times for all types of gasoline come from the same population. As additional justification for eliminating the low lead weekend data and assuming that all service times come from the same population, a Chi-Square Goodness-of-Fit test for k independent samples was used to test the hypothesis that the distribution of the service times for the 3 types of gasoline was the same versus the alternate hypothesis that at least one of the distributions was different. This hypothesis was tested first including the low lead weekend data and then after excluding that data. The frequency count for this test was made for 30 second intervals with adjacent intervals at each tail of the distribution being combined to obtain adequate expected frequencies to insure the validity of the test. A total of 13 intervals were obtained thus yielding 24 degrees of freedom, (k-1)(r-1). With a significance level of .05 the critical value of $X^2_{.05;24}$ is 36.42 [5]. The computed X^2 statistic for the data inclusive of the low lead weekend data was 46.02. Therefore the null hypothesis was rejected (see Table VII). However, when the low lead weekend data was excluded from the analysis the computed X^2 statistic was 27.09 and the null hypothesis could not be rejected (see Table VIII). A X^2 statistic of 27.09 with 24 degrees of freedom does not become significant until approximately the .30 level of significance is called for, indicating again that a fairly good fit has been found.

TABLE VII.

GOODNESS OF FIT - SERVICE TIME DATA (ALL)

Interval (minutes)	Frequency by Type Unleaded	Low Lead	Premium	Subtotal
1. 0.0 - 2.0	5	10	6	21
2. 2.0 - 2.5	13	23	8	44
3. 2.5 - 3.0	53	49	22	124
4. 3.0 - 3.5	57	59	23	139
5. 3.5 - 4.0	93	70	23	186
6. 4.0 - 4.5	94	49	41	184
7. 4.5 - 5.0	55	36	15	106
8. 5.0 - 5.5	43	23	12	78
9. 5.5 - 6.0	15	11	7	33
10. 6.0 - 6.5	15	6	12	33
11. 6.5 - 7.0	10	4	5	19
12. 7.0 - 8.0	10	7	4	21
13. > 8.0	3	3	5	11
TOTALS	466	350	183	999

H_0: the 3 distributions are the same.
H_1: at least 1 differs.

Critical value of $X^2_{.05;24} = 36.42$

$X^2 = 46.02$

Reject H_0

TABLE VIII.

GOODNESS OF FIT - SERVICE TIME DATA
(Less Low Lead Weekend)

Interval (minutes)	Frequency by Type Unleaded	Low Lead	Premium	Subtotal
1. 0.0 - 2.0	5	3	6	14
2. 2.0 - 2.5	13	7	8	28
3. 2.5 - 3.0	53	18	22	93
4. 3.0 - 3.5	57	17	23	97
5. 3.5 - 4.0	93	37	23	153
6. 4.0 - 4.5	94	26	41	161
7. 4.5 - 5.0	55	22	15	92
8. 5.0 - 5.5	43	11	12	66
9. 5.5 - 6.0	15	7	7	29
10. 6.0 - 6.5	15	4	12	31
11. 6.5 - 7.0	10	3	5	18
12. 7.0 - 8.0	10	3	4	17
13. > 8.0	3	3	5	11
TOTALS	466	161	183	810

H_0: the 3 distributions are the same.
H_1: at least 1 differs

Critical value of $X^2_{.05;24} = 36.42$

$X^2 = 27.09$

Do not reject H_0

The analysis now turns to determining a probability distribution of service times which will be sufficiently realistic to provide reasonable predictions about the functioning of the system. Since the system is being modeled for peak period operation and the assumption has been made that the service time for all gasoline types is the same, the focus for this portion of the analysis is again on the unleaded data. Based on the general shape of the histogram for the unleaded service time data, it was decided to attempt to fit the observed distribution to a form of the Gamma distribution known as the Erlang distribution. The Erlang distribution is common to most actual service-time distributions and has the following probability distribution function,

$$f(x) = \frac{\lambda^m x^{m-1} e^{-\lambda x}}{(m-1)!} \quad \text{, with a mean} = m/\lambda \text{ and}$$

variance = m/λ^2, where λ and m are strictly positive parameters of the distribution and m is further restricted to being an integer [2]. The cumulative distribution function is given by, $F(x) = 1 - \sum_{k=0}^{m-1} \frac{(\lambda x)^k e^{-\lambda x}}{k!}$ [3]. Utilizing the sample mean of 4.21 minutes and the sample variance of 1.44 minutes, the parameters λ and m were estimated as approximately 3 and 12, respectively, by solving the equations for the mean and the variance simultaneously.

Beginning with the initial estimates of λ and m from the sample data, the cumulative distribution function was utilized

and the parameters varied, to find the distribution which appeared to best fit the observed distribution. Both the Chi-Square Goodness-of-Fit and the Kolmogorov-Smirnov one sample tests were utilized to test the hypothesis that the observed distribution did not differ from the theoretical Erlang distribution with parameters λ and m. The parameters were adjusted until an Erlang distribution was found which could not be rejected by either test. The parameters obtained by this method were a λ of 3.35 and an m of 14. For the Chi-Square test the frequency counts were made for one minute intervals, except that adjacent intervals were combined at both tails of the distribution so that the expected frequencies would be sufficiently large to provide a valid test. Seven intervals were thus obtained which, at the .05 significance level, has a critical $X^2_{.05;6}$ value of 12.59 [5]. The computed X^2 statistic for this test was 9.16 which does not become significant until the .16, approximately, significance level (see Table IX). For the Kolmogorov-Smirnoff test the cumulative expected and observed frequencies were compared at 30 second intervals, except at the tails. The critical value of $D_{.05}$ is .063 [5] while the computed D statistic for this test was only .032 (see Table X). The null hypothesis could not be rejected by either test so the assumption is made that the service time distribution can be

TABLE IX.

CHI-SQUARE TEST OF SERVICE TIME DISTRIBUTION
(= 3.35; m = 14)

Intervals (minutes)	Observed Frequency	Expected Frequency
1. 0 - 2	5	4
2. 2 - 3	66	60
3. 3 - 4	150	155
4. 4 - 5	149	145
5. 5 - 6	58	72
6. 6 - 7	25	23
7. > 7	13	7
TOTALS	466	466

H_o: there is no difference between the distributions.
H_1: they differ.

Critical value of $X^2_{.05;6} = 12.59$

$X^2 = 9.16$

Do not reject H_o

TABLE X.

KOLMOGOROV-SMIRNOFF TEST OF SERVICE TIME DISTRIBUTION

Time (x) (minutes)	$F_o(x)$	$S_n(x)$	$F_o(x) - S_n(x)$
2.0	4	5	-1
2.5	21	18	3
3.0	64	71	-7
3.5	135	128	7
4.0	219	226	7
4.5	300	315	-15 .... $D_{max} = 15/466 = .032$
5.0	364	370	-6
5.5	409	413	-4
6.0	436	428	8
6.5	451	443	8
7.0	459	453	6
8.0	464	463	1
>8.0	466	466	0

H_o: there is no difference between the distributions.

H_1: they differ.

Critical value of $D_{.05} = .063$
Do not reject H_o

realistically represented by an Erlang distribution with parameters $\lambda = 3.35$ and $m = 14$. To demonstrate the apparent goodness of this fit, a graph of the observed and theoretical cumulative distribution functions are shown in Figure 8 along with the service time values and associated probabilities used to construct the graph.

C. CONSUMPTION BY TYPE

Another assumption that required testing was that the percent of gasoline by type being purchased was a satisfactory predictor of the ratio of vehicles purchsing the different types of gasoline. It is plausible that a certain type(s) of gasoline may be used by vehicles possessing the larger tank capacities whereas other types might be used mainly by vehicles with smaller tank capacities. If this were the case, than the ratio of consumption by type could not be used to model the ratio of vehicles purchasing each type. Resultantly, it would be necessary to develop consumption rate data per gasoline type in order to allow realistic predictions concerning the effects of changes in the demand for different types of gasoline. CDR Evans had stated that approximately 45% of the gasoline sold at the station was unleaded, 35% low lead and 20% premium. On 22 March, between 0940 and 1244 hours (when the station ran out of premium gasoline), 142 vehicles purchased unleaded gas, 115 low lead, and 57 premium for a total of 314 gasoline purchases.

FIGURE 8

CUMULATIVE DISTRIBUTION FUNCTION OF SERVICE TIMES

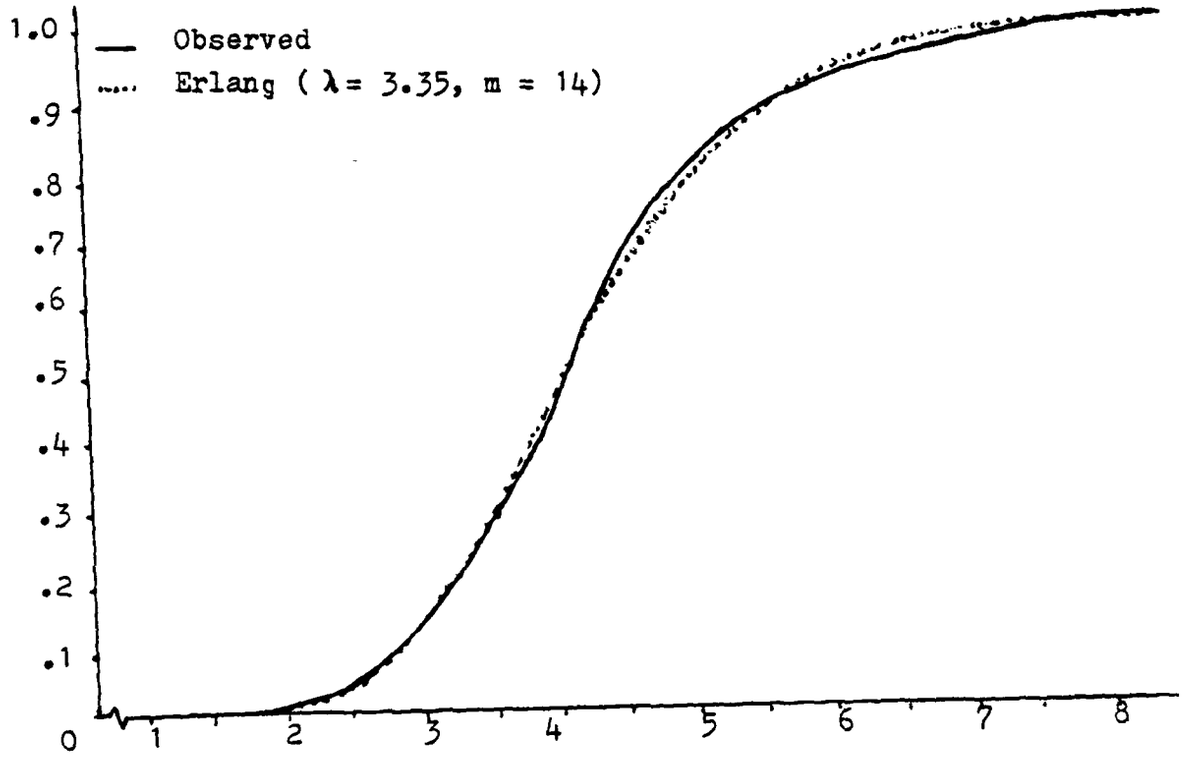

Time (minutes)	Observed CDF	Erlang CDF
2.0	.0107	.0091
2.5	.0386	.0466
3.0	.1524	.1392
3.5	.2747	.2898
4.0	.4742	.4708
4.5	.6760	.6439
5.0	.7940	.7822
5.5	.8863	.8778
6.0	.9185	.9365
6.5	.9506	.9692
7.0	.9721	.9860
8.0	.9936	.9975
	1.0000	1.0000

A Chi-Square Goodness-of-Fit test was utilized to test the hypothesis that this sample came from a 45, 35, 20 percent distribution (see Table XI). The critical value of $X^2_{.05;2}$ is 5.99 [5] whereas the computed X^2 statistic for this test was only .806, which does not become significant until the .33 level of significance is called for. Therefore the hull hypothesis could not be rejected and it appears realistic to utilize gasoline consumption as a predictor of the ratio of vehicles purchasing each type. This assumption is further strengthened by the fact that the service times for all types has previously been shown to come from the same population indicating that the number of vehicles with large, medium and small tank capacities were proportionally equivalent in the use of the three types of gasoline.

TABLE XI.

CONSUMPTION VERSUS NUMBER OF PURCHASES BY TYPE

	FREQUENCY BY TYPE			
	Unleaded	Low Lead	Premium	Total
Observed	142	115	57	314
Expected	141	110	63	314

H_o: the number of purchase by type has a 45, 35, 20% distribution.
H_1: the distribution is not 45, 35, 20%

Critical value of $X^2_{.05;2} = 5.99$ $X^2 = .806$

Do not reject H_o

IV. MODEL ASSUMPTIONS

The model which has been developed is simplistic in nature but sufficiently detailed to allow examination of the more critical factors effecting the efficiency of the system. The ensuing discussion outlines the model with the primary purpose of detailing the assumptions that have been made during development. A thorough understanding of the underlying assumptions is essential to maximize the use of the simulation as a decision tool and to comprehend the limitations of the model. This comprehension is also significant so that management personnel can direct necessary modifications to the model as the dynamic environment changes causing present assumptions to become unrealistic. The majority of the assumptions concern the manner in which the system will operate in the future. Consumer behavior, after addition of the new island and the offering of full service at one lane, may be contrary to what has been assumed in the model which has been based on present behavior.

The first assumption is that all lanes will be of two basic types; those dispensing a single grade of gasoline or those with 3 pumps, dispensing unleaded gasoline at the first and last pumps and low lead at the middle pump. This assumption is based on the current and anticipated arrangements. Options which include different grades in the same self service lanes

are not considered in that they are deemed to be impractical for maximizing the utilization of the pumps as described in Chapter II.

The assumption that a 3-pump lane will have 2 unleaded and 1 low lead pump is based on the demand for those grades. Unleaded gasoline is the most highly demanded grade and this demand is expected to continue increasing as a result of the exhaust emission requirements enacted during the mid 1970's. On the other hand, the demand for premium gasoline has been decreasing as a result of these emission standards. Resultantly, premium grade is not considered for a 3-pump lane and the unleaded grade is assumed to be dispensed from 2 of 3 of the 3 pumps.

The 3-pump lane only considers the low lead grade at the middle pump. Again, this is for maximum utilization. Due to the physical limitations described in Chapter II, only 2 vehicles can be serviced simultaneously. If the low lead pump is the first pump, servicing of an unleaded or low lead vehicle prevents utilization of the remaining 2 pumps when the next vehicle to be serviced requires low lead gasoline. Likewise, if the last pump is low lead, servicing of a low lead vehicle blocks utilization of the first two pumps regardless of the grade required by the next vehicle waiting to be serviced. Assigning the middle pump as low lead allows the

first and last to be utilized when two unleaded vehicles are to be serviced; the first and middle when an unleaded and low lead vehicles, respectively, are the next to be serviced; and, the middle and last when the next vehicles require low lead and unleaded, respectively. A utilization problem does exist when a vehicle is being serviced at the one low lead pump and the next vehicle to be serviced also requires low lead gasoline.

Concerning utilization of the pumps at a 3-pump lane, it is always assumed that 2 vehicles can be serviced simultaneously given the conditions in the preceding paragraph. In other words, if an unleaded vehicle is the first to be serviced, it is assumed that it will go to the first pump and park far enough forward to allow a vehicle to be serviced at the middle pump, should the next vehicle require low lead gasoline. However, a third vehicle will be incapable of being positioned close enough to the third pump to be serviced. Likewise, when the first vehicle to be serviced is low lead, it will go to the middle pump and park far enough forward to be serviced by the middle pump and still allow room for an unleaded vehicle to be serviced at the last pump. Unregulated parking at the pumps for servicing could cause underutilization. It is expected that the service station attendant(s) for that lane will insure that the proper parking discipline is followed.

It has been assumed that all lanes dispensing the same grade of gasoline will be contiguous and that operation is

not altered by the sequencing of the lanes by grade. Therefore the model always assumes lanes 1 through the number of unleaded lanes as unleaded, the next number of low lead lanes as low lead, then premium lanes and, finally, the combination lanes, if any. Options which have like grade lanes separated can be analyzed with the model if one is willing to assume that this arrangement has no effect on system operation. It is the opinion of the researcher that such an arrangement would create confusion among the consumers thus disrupting the queuing process. Some customers would spend time in the wrong queue before realizing their mistake and then have to go to the rear of the proper queue. Time in the wrong queue would be "lost" time as it increases waiting time without getting the customer closer to being serviced.

Another assumption of the model is that lanes will be available for dispensing each of three different grades of gasoline. The variable names given in the program for the 3 grades are UNLEADED, LOW LEAD and PREMIUM since these are the 3 grades currently dispensed. However, these variable names could represent any three grades. Replacing premium with diesel fuel is an option receiving strong consideration. This option can be realistically examined without any modification to the program as it involves a direct substitution of one grade for another. However, reducing the number of

gasoline types by eliminating premium or increasing the number by adding diesel fuel would require minor modification of the program. Combination (3-pump) lanes are not required in the model. The model can be utilized without modification to explore options with or without the 3-pump combination lanes.

The preceding discussion has centered on the assumptions concerning the physical environment under which the system operates. The following discussion will examine the assumptions concerning queue discipline and decision making by the consumer. These assumptions are based on the discussions with the Exchange Officer and Station Manager concerning system operation and the observations of the researcher during the data collection phase of model development.

Although full service is to be offered at the 3-pump lane being installed at the Exchange Service Station, there will be no price difference between a grade of gasoline dispensed from that lane and a like grade dispensed from a self service lane. Therefore it is assumed that a customer will be indifferent as to selection of a self or full service lane. The primary factor that a customer will consider is how quickly he or she can begin service. This seems to be a reasonable assumption considering the type of service provided (mini service as explained in Chapter II) at the self service lanes and the fact no additional cost is incurred for chosing the

full service lane. The primary difference between the full and mini service will be that the customer need not request the attendant to pump the gasoline at the full service lane. Service times for the full service lanes are assumed to come from the same population as the mini service lanes since there will be very little actual difference in the amount of service provided.

In selecting a lane, based on the following logic, the customer is assumed to select a 2-pump lane over a 3-pump lane when all other criteria are equal. This assumption is predicated on the fact that certain combinations of arrivals can create underutilization of the pumps at a 3-pump lane as discussed earlier in this chapter. Therefore the probability of obtaining service sooner at a 2-pump lane is higher.

The logic for customer lane and pump selection, given that they dispense the required gasoline, is as follows. The customer first searches for a lane with all pumps available for service and goes to the first pump in that lane dispensing the required gasoline. If that serch has negative results, he looks for a lane with the last pump (2-pump lane) or the middle and last pumps (3-pump lane) open. When found he goes to the last pump of a 2-pump lane or the middle or last pump, depending on required gasoline grade, of a 3-pump lane. A negative search at this point results in the vehicle having to enter a queue with the possible exception of a vehicle requiring unleaded gasoline. The last pump of a 3-pump lane is searched to determine if the

unleaded vehicle can be serviced there. If these searches are all negative, no pumps are available to service the vehicle and it must now search for the shortest queue to enter. Again, preference is for a 2-pump lane when the queue sizes are equal.

When identical conditions exist for two or more lanes, during the searches described in the preceding paragraph, the first lane meeting those requirements is selected. This is consistent with the researcher's observations of the actual system operation. Under these circumstances, there was a strong tendency for the customer to select the first (closest) lane meeting his or her requirements. When identical lane conditions exist when a vehicle has to enter a queue, the first lane meeting these conditions is selected under the 3-pump lane logic and the last lane searched is selected under the 2-pump lane logic. No lane preference was noted during actual system operation and therefore the only significant factor assumed is the preference for a 2-pump over a 3-pump lane.

Bypassing is not considered in the model. This is when a vehicle at a latter pump departs by driving around a vehicle still being serviced at the forward pump or when one vehicle drives around another being serviced at the latter pump in order to get to the idle forward pump. Although some bypassing was observed during data collection, it occured primarily during slow operating periods when vacant adjacent lanes permitted

this procedure. Very little bypassing occured during peak periods. Vehicles parked next to the southernmost lane precluded bypassing at that lane while heavy utilization of the other adjacent lanes prevented bypassing there. The only lane where bypassing could occur during peak periods was at the northernmost lane. However, when a vehicle at a latter pump bypassed the vehicle at the forward pump, the next vehicle in the queue would still normally wait till the forward pump opened and go to the forward pump for service. This is a reasonable reaction as the driver observes that the first pump will soon be open and, after waiting in the queue himself, he or she is well aware that everyone in the queue behind him or her is anxious to service their vehicles also. Additionally, bypassing is considered dangerous and is not permitted. The service attendants have instructions to prevent customers from bypassing when they attempt to do so. Finally, the Exchange Officer stated that he is strongly considering erecting posts adjacent to the northernmost lane to prevent the bypassing that does occur there.

V. PROGRAM RUNNING INSTRUCTIONS

The procedures for running the program are outlined in this chapter utilizing the input data shown in Appendix E, Program Listing, for illustration. The sample data represents the three options that were utilized in developing and testing the program. These options represent alternatives in system design with the environmental factors being held constant at the values obtained in Chapter III. Option 1 represents the station as it will be after installation of the new island; option 2 is the present system configuration; and, option 3 simulates a 3-2-1 (unleaded-low lead-premium) lane configuration which is currently possible and believed to be a viable option for reducing the long unleaded queues and hence the overall average waiting time. Following the discussion of the input data is a brief comparison of the results of a program run for the three options. Sample output for these three options is shown in Appendix D.

The program uses free form read statements for reading in the variable input data. Therefore the following rules apply for preparation of the data cards [1]:

a. Values need not occupy specific columns.
b. Values must be separated from each other by at least one blank column.
c. A value cannot be split between cards.

The data must be entered in the sequence in which they are about to be discussed. Although not a requirement, it is recommended that the data be placed on the cards indicated to facilitate changing various values. The sample cards shown here correspond with those shown in Appendix E.

Data Card 1 (Example	3 (a)	20 (b)	3 (c)	4.0 (d)

a. the number of options - establishes how many times the program reads in and simulates the operation with new variable values.

b. number of replications - controls the number of times that each option is to be replicated in order to provide the desired statistical significance for the data being examined.

c. number of random number streams - currently fixed at 3; one each for determining gasoline types, arrival times and service times. This has been included as part of the input data to allow for easy modification of the program. This data is used for saving and then reusing initial random number stream seeds as detailed in Appendix B.

(Note - the preceding data items are parameters for running the program and are not variables being examined.)

d. open time - the length of time, in hours, that the lanes are to remain open for the simulation. This

is included on the first data card as it is a parameter that should not change when comparing options.

(Note - the remaining data is required for each option. Data for the option with the greatest number of lanes must be entered first.)

Data Card 2 (Example)

3 (e)	2 (f)	2 (g)	1 (h)

e. number of unleaded lanes - minimum requirement of 1; no maximum restriction.

f. number of low lead lanes - minimum requirement of 1; no maximum restriction.

g. number of premium lanes - minimum requirement of 1; no maximum restriction.

h. number of combination lanes - no minimum requirement or maximum restriction. Enter 0 if there are none.

Data Card 3 (Example)

.45 (i)	.35 (j)	.20 (k)

i. population ratio of vehicles requiring unleaded gasoline.

j. population ratio of vehicles requiring low lead gasoline.

k. population ratio of vehicles requiring premium gasoline.

Data Card 4 (Example)

.4751	14	3.35
(l)	(m)	(n)

l. mean interarrival time, in minutes, for the Exponential distribution of vehicle arrivals.

m. M parameter for the Erlang distribution of service times.

n. λ parameter for the Erlang distribution of service times.

Data Card 5 (Example)

8
(o)

o. total number of lanes.

Data Card 6 (Example)

2	2	2	2	2	2	2	3
(p)	(q)	.....					(w)

p - w. the number of pumps for each lane. A value must be entered for each lane in the option. Caution should be taken in entering the values in the correct sequence; unleaded lanes first, followed by the low lead lanes, then the premium lanes and finally the combination lanes, if any.

Cards 7 - 11 will contain the same information for the second option, if any, as cards 2 - 6 contain for the first option; cards 12 - 16 for a third option, etc. Therefore the first card of the data deck will contain the program running parameters and will be followed by a set of five data cards for each option to be examined.

It is extremely important that the data for the option with the greatest number of lanes be entered first. The statistical routines that are established for each lane are created during the exercise of the first option. Insufficient routines will be available for examination of subsequent options if the option with the greatest number of lanes is not entered and examined first.

Job control cards for running this SIMSCRIPT II.5 program are included in the program listing, Appendix E.

The base case for the test simulation was option 2, the current system operation. Note in Appendix D that, with the present lane configuration, during a 4 hour operation period the average queue lengths for the unleaded, low lead and premium lanes are 8, 1 and 0, respectively. The respective maximum queue lengths are 18, 6 and 2. This simulation outcome is consistent with the observations made during data collection and with what one would intuitively expect for the environmental data used. Note additionally, that the average waiting time was near 11 minutes and had a wide variation.

By converting one of the premium lanes to unleaded, option 3, the unleaded queues are practically eliminated with their average becoming 0 and the maximum length being 3. However, the single premium lane develops a queue which averaged 4 and had a maximum length of 12. The average waiting time is greatly reduced, from 10.73 to 4.22 minutes, and the variance

is much smaller. As expected, the queues remain the same for the low lead lanes which were unaltered in this option.

Option 1, the alternative soon to be implemented, simulation shows near elimination of all the queues with the average for all lanes being 0 and the maximum queue length being 2. additionally, waiting time is shown to be reduced to less than a minute. However, the simulation results indicate a large reduction in pump utilization as a result of the addition of another service island. Options 2 and 3 had 97 and 87, respectively, vehicles blocked from leaving a latter pump while option 3 only shows 50 being blocked. This better than 40% reduction with 502 vehicles being serviced under each option indicates that the latter pumps are not being utilized as heavily as in the other options.

No attempt has been made in this thesis to address the significance of reductions in pump utilization. It is simply provided as an indicator to management to prevent consideration of options which solve queue and waiting time problems by providing, at a great expense, an excessive number of pumps. The ideal situation is one in which minimum queues develop while all pumps are highly utilized. Due to the randomness of arrivals and service times, such an occurrence is highly unlikely. Therefore the simulation of option 1 indicates the system alternative to be implemented to be a good alternative.

VI. CONCLUSIONS AND RECOMMENDATIONS

Although the model was developed for the Naval Postgraduate School Exchange Service Station, it's use is not limited to that station. Gasoline pumping operations are sufficiently similiar at most other stations in the exchange system and the model is sufficiently general to allow use of the model without, or with only minor, modification.

The model is capable of analyzing the gasoline pumping operation in two ways. First, an analysis of the system can be accomplished by simulating one physical layout under various environmental conditions. For example, the present 2-2-2 (unleaded-low lead-premium) lane configuration could be examined to determine what effects changes in the arrival rate, service time or demand for gasoline grades has on the system. This could provide valuable insight as to when changes in system design should be considered. Secondly, alternatives in system design can be examined by holding environmental factors constant and observing the effect on operations that different physical layouts have. For example, system operation under the present and future lane configurations can be examined utilizing the arrival rate, service time and gasoline demand data obtained in Chapter III.

The effects of changes in the following variables can be examined by the model: 1, length of operation; 2, the number

of unleaded, low lead, premium and combination lanes; 3, the population ratios of the vehicles requiring different grades of gasoline; 4, the interarrival distribution; and, 5, the service time distribution.

A realistic figure should be used for examination of the options based on the arrival rate and daily allocation. This time is constrained by the number of vehicles which can be serviced, based on average purchase quantities, given the daily allocation. For example, the daily allocation at the time data was collected for this study would allow approximately 475 to 500 vehicles to be serviced each day. Approximately 500 vehicles will arrive during a 4 hour period utilizing the peak arrival rate determined in Chapter III. Therefore 4 hours is a realistic open time for examination of options under the present conditions.

It should be kept in mind that all system variables are subject to change over time and for different stations. Therefore the distributional data determined in Chapter III should not be considered valid for simulations run in the future. Data should be collected and analyzed utilizing the techniques outlined in Chapter III. Interarrival and service times can normally be expected to exhibit exponential and Erlang distributions, respectively, as earlier shown.

For each option simulated, the input variable values are first shown followed by the results of the simulation.

Therefore the output shows exactly what has been simulated and the associated results. The primary item of interest for each option is the queuing process, especially the average waiting time to be expected. Three items of information provide insight into this process. The average and maximum queue lengths are shown for each lane along with the average waiting time in a queue for all queues combined. It should be noted that the average queue length is a time weighted average.

Measures are also provided to give insight into the blocking process. They include the number of vehicles that can be expected to be delayed, the total amount of time those vehicles will be blocked and the average amount of time a vehicle, which becomes blocked, is delayed. This information gives insight into pump utilization. In this tandem server system, blocking is to be expected when all pumps are being utilized. Options that show little or no blocking are indicative of underutilization of the pumps. This occurs when too many lanes/pumps are provided for the service demand. Thus most vehicles get serviced at the forward pumps and are not delayed from departing at the completion of service.

The last information provided is the average number of vehicles that are serviced at the given arrival rate for the amount of time that the lanes are open. This serves as a check on the open time variable to insure that the servicing

of a realistic number of vehicles is being simulated based on the daily allocation. The standard deviation of all output measurements are also provided to give insight into their variability.

The information provided by the simulation must be analyzed in the proper context. The simulation provides insight into the system operation under stress conditions. The arrival rate should be the maximum rate expected. This simulation can be a valuable aid to managerial decision making if the assumptions and limitations of the model are fully understood when utilizing the program and analyzing the options being examined.

APPENDIX A: PROGRAM VARIABLE DEFINITIONS

ARRIVAL - the event (subroutine) which processes all actions required as the result of a vehicle arrival.

AUTO - a counter used to record the number of vehicles processed during each replication.

AVG.AUTO - the statistical routine used to calculate the average number of vehicles (T.AUTO) processed during n replications of each option (see also, T.AUTO and SD.AUTO).

AVG.AVG.JAM - the average smount of time that a vehicle, blocked from departing after service completion, is delayed from leaving. The value of AVG.JAM at the end of each replication which is then used in statistical routines for calculation of the average and standand deviation of delay time for n replications of each option (see also, AVG.JAM, MN.AVG.JAM and SD.AVG.JAM).

AVG.JAM - the statistical routine used to calculate the average amount of time that a vehicle, blocked from departing after service completion, is delayed from leaving (see also, JAM.TIME and AVG.AVG.JAM).

AVG.NO.JAM - the number of vehicles that were blocked by another from leaving after service was completed. It is the value of NO.JAM at the end of each replication which is then used in statistical routines for calculation of the average and standard deviation of average delay

time for n replications of each option (see also, NO.JAM, MN.NU.JAM and SD.NO.JAM).

AVG.QUEUE.LENGTH - the statistical routine used to calculate the average length of each queue during each replication (see also, MN.NO.CARS, MN.QUEUE.LENGTH and SD.QUEUE.LENGTH).

AVG.TOTAL.JAM - the total amount of time that vehicles, blocked from departing after service completion, are delayed from leaving during each replication. It is the value of TOTAL.JAM at the end of each replication and is used in statistical routines for the calculation of the average and standard deviation of the total delay time for n replications of each option (see also, TOTAL.JAM, MN.TOTAL.JAM and SD.TOTAL.JAM).

BLOCKED - a pump status indicating that the vehicle being serviced at that pump will be delayed from leaving after service completion because the vehicle at a forward pump will still be under-going service, or, in the case of the last pump of a 3 pump lane, the pump is unavailable for use beacuse; 1, the other 2 pumps are already in use, or, 2, the low lead (2d) pump is in use and the next vehicle in the queue waiting to be serviced is also low lead.

BUSY - a pump status indicating that a vehicle is being serviced at that pump and it will be able to depart immediately upon completion of the service.

CAR - a temporary entity used to record the time of arrival (TIME.OF.ARRIVAL) and gas type (FUEL.TYPE) of vehicles that arrive but cannot be immediately serviced (vehicles that must enter a queue). Note that a record of vehicles being serviced immediately need not be retained as the attributes of the lane are changed to reflect the proper actions to follow.

CLOSE.PUMPS - the event (subroutine) used to stop further arrivals after the lanes are closed. Only DEPARTUREs, vehicles already being serviced or in the queues, will be processed after event CLOSE.PUMPS occurs.

DEPARTURE - the event (subroutine) which processes all actions required as the result of a vehicle departure. Note that departures are keyed to the lane and pump from which the departure occurs, not on the vehicle.

FIRST.PUMP - the attribute of each lane which represents the status (IDLE, BUSY or BLOCKED) of the first pump for that lane.

FUEL.TYPE - the attribute of a vehicle (CAR) used to record the type of gasoline (UNLEADED, LOW.LEAD or PREMIUM) that it requires.

GAS.TYPE - the attribute of each lane (LANE) representing the type(s) of gasoline (UNLEADED, LOW.LEAD, PREMIUM or UN.OR.LL) dispensed from the pumps in that lane.

IA.TIME - the average interarrival time, in minutes, for vehicles arriving to get gas. Used as an argument of the exponential distribution library function, EXPONENTIAL.F, to randomly determine the time of each arrival.

IDLE - a pump status indicating that the pump is available for servicing of another vehicle. Note that this status does not necessarily mean that a vehicle can get to the pump for servicing as this pump may be forward of one that is BUSY.

ISLAND - a temporary attribute of the event departure used to pass the lane designation from which the departure is to occur.

JAM.TIME - the time that a vehicle is delayed from departing after service completion because a vehicle at a forward pump is still being serviced.

LAMBDA - one of the 2 parameters of the Erlang distribution used to represent the population of service times. The 2 parameters are used in the arguments of the ERLANG.F library function for randomly determining the service time for each vehicle in the model (see also, M).

LANE - the permanent entities representing the gas lanes for servicing the vehicles. Each lane is characterized by attributes which represent the status of it's pumps, times when the status' change (note that only the times for a change from the busy state are recorded), type of gas dispensed, a queue of vehicles waiting to be serviced at that lane and the average and maximum number of vehicles in that queue.

LAST.PUMP - the attribute of each lane (LANE) which represents the status (IDLE, BUSY or BLOCKED) of the last pump for that lane.

LL.RATIO - the ratio (percent) of vehicles in the population being sampled which require low lead gasoline.

LOW.LEAD - low lead gasoline. Used to designate and determine the type of gasoline dispensed at a lane or needed by a vehicle.

M - one of the 2 parameters of the Erlang distribution used to represent the population of service times. The 2 parameters are used in the arguments of the ERLANG.F library function for randomly determining the service times for each vehicle in the model (see also, LAMBDA).

MAX.NO.CARS - the maximum number of vehicles in the queue for each lane. It is the value of MAX.QUEUE.LENGTH at

the end of each replication and is used in the statistical routines for calculating the average and standard deviation of the maximum queue length for n replications of each option (see also, MAX.QUEUE.LENGTH, MN.MAX.QUEUE and SD.MAX.QUEUE).

MAX.QUEUE.LENGTH - the statistical routine for calculating the maximum queue length for each lane during a replication (see also, N.QUEUE and MAX.NO.CARS).

MEAN.WAITING.TIME - the statistical routine for calculating the average time, during a replication, that vehicles have to wait, after arrival, until service begins (see also, MN.TIME.WAIT).

MID.PUMP - the attribute of each lane (LANE) which represents the status (IDLE, BUSY or BLOCKED) of the middle pump for that lane. For a 2 pump lane this status is always IDLE as no middle pump exists.

MN.AVG.JAM - the statistical routine for calculating the average amount of time that vehicles, which are blocked after service completion, are delayed from leaving for each option (see also, AVG.AVG.JAM and SD.AVG.JAM).

MN.MAX.QUEUE - the statistical routine for calculating the average maximum queue length for each lane of an option (see also, MAX.NO.CARS and SD.MAX.QUEUE).

MN.NO.CARS - the average queue length of each lane. It is the value of AVG.QUEUE.LENGTH at the end of each replication and is used in the statistical routines for calculating the average and standard deviation of the average queue length for n replications of each option (see also, AVG.QUEUE.LENGTH, MN.QUEUE.LENGTH and SD.QUEUE.LENGTH).

MN.QUEUE.LENGTH - the statistical routine for calculating the average queue length for each lane for n replications of an option (see also, MN.NO.CARS and SD. QUEUE.LENGTH).

MN.TIME.WAIT - the average time a vehicle has to wait, after arrival, until service begins. It is the value of MEAN.WAITING.TIME at the end of each replication and is used in statistical routines for calculating the average and standard deviation of the average waiting time for n replications of each option (see also, MEAN.WAITING.TIME, MN.WAITING.TIME and SD.WAITING. TIME).

MN.TOTAL.JAM - the statistical routine for calculating the average amount of total time that vehicles, blocked after completion of service, are delayed from departing during n replications of an option (see also AVG.TOTAL.JAM and SD.TOTAL.JAM).

MN.WAITING.TIME - the statistical routine used to calculate the average amount of time vehicles had to wait, after arrival, until service began, during the n replications of an option (see also, MN.TIME.WAIT and SD.WAITING.TIME).

N.COMB.LANES - the number of 3 pump lanes for an option. A combination lane dispenses unleaded gasoline from the first and last pumps and low lead gasoline from the middle pump.

MN.NU.JAM - the statistical routine for calculating the average number of vehicles, blocked after completion of service, delayed from departure (see also, AVG.NO.JAM and SD.NO.JAM).

N.LANE - the total number of lanes for an option.

N.LL.LANES - the number of low lead lanes for an option.

N.OPTIONS - the number of options being examined during any program run.

N.PR.LANES - the number of premium lanes for an option.

N.PUMP - the number of pumps per lane. The value read in to set the NO.OF.PUMPS attribute for each lane.

N.QUEUE - the number of vehicles in the specified queue at any particular time during the simulation.

N.REPLICATIONS - the number of times each option is replicated.

N. STREAMS - the number of random number streams to be utilized for random sampling.

N.UN.LANES - the number of unleaded lanes for an option.

NO.JAM - the statistical routine used to record the number of vehicles, blocked after completion of service, delayed from departure during a replication (see also, JAM.TIME and AVG.NO.JAM).

NO.OF.PUMPS - the attribute of each lane (LANE) which represents the number of pumps at each lane (either 2 or 3).

OPEN.TIME - the amount of time the lanes are open to arrivals for each simulation run. All vehicles which arrive during the open time will be serviced. A replication does not terminate until all vehicles have been serviced and depart.

PR.RATIO - the ratio (percent) of vehicles, in the population from which sampling is occurring, that require premium gasoline.

PREMIUM - premium gasoline. Used to designate and determine the type of gasoline dispensed at a lane or needed by a vehicle.

QUEUE - the attribute of a lane (LANE) used to hold the vehicles waiting for service in that lane.

SAVE.SEED - a 2 dimensional array used to save the initial random number seeds for each stream for each replication of the first option so that the identical seeds can be used for sampling during the remaining

options. Therefore the options can be examined under identical operating conditions.

SD.AUTO - the statistical routine used to calculate the standard deviation of the number of vehicles (T.AUTO) processed during n replications of an option (see also T.AUTO and AVG.AUTO).

SD.AVG.JAM - the statistical routine used to calculate the standard deviation of the amount of time that vehicles, which are blocked after completion of service, are delayed from departure for an option (see also, AVG.AVG.JAM and MN.AVG.JAM).

SD.MAX.QUEUE - the statistical routine used to calculate the standard deviation of the maximum queue length for each lane for an option (see also, MAX.NO.CARS and MN.MAX.QUEUE).

SD.NO.JAM - the statistical routine used to calculate the standard deviation of the number of vehicles, which are blocked after completion of service, delayed from departure (see also, AVG.NO.JAM and MN.NU.JAM).

SD.QUEUE.LENGTH - the statistical routine for calculating the standard deviation of the queue length for each lane for n replications of an option (see also, MN.NO.CARS and MN.QUEUE.LENGTH).

SD.TOTAL.JAM - the statistical routine for calculating the standard deviation of the total time that vehicles,

blocked after compltion of service, are delayed from departure during n replications of an option (see also, AVG.TOTAL.JAM and MN.TOTAL.JAM).

SD.WAITING.TIME - the statistical routine used to calculate the standard deviation of the time vehicles have to wait, after arrival, until service begins during n replications of an option (see also, MN.TIME.WAIT and MN.-WAITING.TIME).

STREAM - a recursive variable used for saving or retrieving initial random number seeds for each stream utilized.

T.AUTO - the number of vehicles serviced during each replication of an option. Used in statistical routines for determining the average and standard deviation of vehicles serviced during n replications of an option (see, AUTO, AVG.AUTO and SD.AUTO).

TIME.OF.ARRIVAL - an attribute of each vehicle (CAR) placed in a queue which serves as a record of it's time of arrival at the service station. Used to calculate waiting time for the vehicle when it's service begins.

TOTAL.JAM - the statistical routine used to record the total amount of time that vehicles, which are blocked after service completion, are delayed from departure during each replication (see also, JAM.TIME and AVG.TOTAL.JAM).

TYPE - a local variable used in event ARRIVAL to record the type of gasoline (UNLEADED, LOW.LEAD or PREMIUM)

needed by the vehicle being processed and to direct processing through the correct lanes and pumps.

UN.OR.LL - unleaded or low lead gasoline. Used to designate the GAS.TYPE attribute of a 3 pump lane which can service either type of vehicle.

UN.RATIO - the ratio (percent) of vehicles in the population from which sampling occurs, which require unleaded gasoline.

UNLEADED - unleaded gasoline. Used to designate and determine the type of gasoline dispensed at a lane or needed by a vehicle.

WAITING.TIME - the amount of time a vehicle has to wait, after arrival, until it's service begins. Used in a statistical routine to determine the average waiting time for all vehicles during a replication (see also, MN. WAITING.TIME).

1ST.PUMP.CLEAR - an attribute of each lane (LANE) designating the time that the service being performed at the first pump will be completed. Used to determine which pump the vehicle is departing from when a DEPARTURE event occurs and when and for how long vehicles will be blocked.

2D.PUMP.CLEAR - the attribute of each lane (LANE) designating the time that the service being performed at the

middle pump (for a 3 pump lane) or last pump (for a 2 pump lane) will be completed. Used to determine which pump the vehicle is departing from when a DEPARTURE event occurs, when and for how long vehicles will be blocked and the status of middle and last pumps.

3D.PUMP.CLEAR - the attribute of each lane (LANE) designating the time that the service being performed at the last pump (of a 3 pump lane) will be completed. Used to determine which pump the vehicle is departing from when a DEPARTURE event occurs, when and for how long vehicles will be blocked and the status of the last pump. (Note - this attribute is always 0.0 for a 2 pump lane as 2D.PUMP.CLEAR serves this attribute for the last pump of a 2 pump lane).

APPENDIX B: PROGRAM VERBAL FLOW

PREAMBLE

Line*	Description
2- 3	Declares the events of the simulation. Additionally, the event departure is given an attribute which is used to pass and identify the lane for each departure.
4- 5	Declares CARs as temporary entities and identifies the attributes each car will have.
6- 9	Declares LANE as a permanent entity and identifies the attributes each lane will have.
10- 13	Defines global variables.
14- 19	Establishes statistical routines for calculating desired statistics on the number of vehicles serviced, queue lengths, waiting time and the time vehicles are delayed from departure.
20- 26	Defines the meaning of variables for use in decision logic.
27- 38	Establishes statistical routines for calculating the average and standard deviation, over n replications, for the end of replication statistics calculated by statements 14-19, above.
39	Defines the 2-dimensional array which is used for saving and then reusing initial random number seeds.
40- 43	Defines global variables.

* numbers in () in the description give specific line references.

MAIN Line	Description
2	Defines local integer variables which are recursive variables used in DO-LOOPS.
3	Reads in variable data concerning the number of options to be examined during the simulation, the number of times each option is to be replicated for statistical analysis, the number of random number streams being utilized and the amount of time the lanes are open during each replication. Although the number of random number streams is currently fixed at 3, this information is included as variable input data to allow for easy modification of the program. For example, after the 3-pump lane is installed, service times may be found to differ for 2 and 3-pump lanes necessitating a modification to this model.
4	Reserves the proper amount of memory space for the array used for storing and retrieving initial random number seeds.
5--94	The DO-LOOP to be performed for each option.
6- 8	Reads in variable data to include the number of unleaded, low lead, premium and combination lanes, the population ratios for vehicles needing each type of gasoline, the mean interarrival time (in minutes) of

vehicles and the Erlang distribution parameters, M and λ, for the service time distribution.

9- 10 Reads in the number of lanes for each option and creates those lanes.

11- 20 Assigns the proper gas type attribute to the appropriate number of lanes. Note the assumption that there will be a minimum of 1 of each type of lane except for the combination lanes. Note also that the first N.UN.LANES are unleaded, the next N.LL.LANES are low lead, etc. For this model the actual arrangement of the lanes is irrelevant - only the number of each type is important.

21- 24 Reads in and assigns the number of pumps (NO.OF.PUMPS) attribute to each lane.

26- 31 Prints the variable values for each option.

32- 69 The DO-LOOP to be performed for each replication.

33- 40 Saves initial random number seeds for each stream and each replication during the first option and then uses the identical seeds for the same streams and replications during ensuing options. This allows the options to be examined under identical operating conditions with arrival and service times being the same during each option.

41- 49 Initializes the status of each pump to idle and it's service completed time to 0.0 prior to each replication.

50	Schedules the first arrival.
51	Initializes the vehicle counter.
52	Schedules when to close the lanes (stop further arrivals).
53	Starts the simulation (turn program control over to the timing routine).
54- 62	Transfers end of replication statistical information into the variables used by statistical routines for calculating statistical data on the n replications for each option.
63	Reinitializes the simulation time to 0.0 for the next replication.
64- 68	Resets statistical routines used to calculate statistics kept during each replication.
70- 81	Prints results of the simulation.
82- 90	Resets statistical routines used to compute statistics on the n replications of each option.
91- 93	Destroys the lanes used during the option just simulated so that new lanes can be created for the next option.

ARRIVAL Line	Description
2	Defines the local integer variable used for selecting the proper queue to be entered by a vehicle.
4	Schedules the next arrival.

5 Counts the number of vehicles being serviced.

6- 17 Determines the gas type needed by the vehicle that just arrived by drawing a uniform random number between 0 and 1 and then testing that random number against the ratio of the vehicles in the population needing each type of gasoline. A random number between 0 and the unleaded ratio assigns the vehicle as unleaded; between the unleaded ratio and the unleaded plus low lead ratio as low lead; and the remainder as premium. If the vehicle needs premium gasoline, program control branches directly to the 2-pump lane logic (118) as no 3-pump lane dispenses premium gasoline.

18- 21 Determines whether 2 or 3-pump lane logic is to followed when a vehicle needs unleaded or low lead gasoline.

22-117 The 3-pump lane logic (only for unleaded and low lead vehicles).

24- 26 Searches for a lane with the required type of gasoline which has all pumps open. Note that the first lane meeting these requirements is selected. This is consistent with the observations of the researcher. There was a noticeable tendency for drivers to select the closest (first) lane meeting their requirements when there was a choice between identical lanes. When

a lane meets these conditions, program control is transferred to line 100.

27- 30 No lane met the preceding conditions so now a search is conducted for a lane with the required gasoline having the middle and last pumps open. If one is found the program control is transferred to line 72 (E on the flowcharts, Appendix C).

31- 33 When no lane with the required gasoline has both the middle and last pumps open, a check is made to determine if the gasoline required is low lead. Since low lead is only dispensed from the middle pump of a 3-pump lane, it is not necessary to search for a 3-pump lane with only the last pump open. Additionally, since the middle pump status of a 2-pump lane is always idle, the last pump of the low lead 2-pump lanes must be busy in order for the preceding search (27-30) to fail. Thus, when the gasoline needed is low lead, program control can be transferred to line 38 in order to find the shortest queue for this vehicle.

35- 36 At this point it is known that the vehicle being processed needs unleaded gasoline and that no 2-pump lanes are available (as explained above, the search in lines 27-30 would not have failed if there was a 2-pump lane with the desired gasoline having the last pump

open). Thus a search is conducted for a 3-pump lane with the last pump open. If one is found the program control is transferred to line 54 (D on the flowcharts, Appendix C).

37- 53 It is now known that no lane with the required gasoline has a pump available to service the vehicle being processed. Therefore this segment of the program determines which queue to put the vehicle in, creates a record of this vehicle and transfers control back to the timing routine to determine the next event to be processed. This process is explained in greater detail as follows.

38- 40 All lanes with the proper type of gasoline are searched to find the lane with the smallest queue. However, if there is more than 1 lane with the required gasoline and tied for the minimum size queue, this procedure selects the last lane searched meeting the requirements. This may be contrary to the assumption that a 2-pump lane will be selected over a 3-pump lane given that all other conditions are equal. This could occur as 3-pump lanes are the last searched. Thus, the following program instructions are utilized to make the proper lane selection.

41- 44 The minimum queue size found for the lane selected by the preceding instructions is made a condition of the

lane search. Thus a search is now made to find the first lane having the required type gasoline and the minimum size queue.

45- 47 At this point a vehicle is finally created in order that a record of it's time of arrival and gas type can be maintained for proper processing when this car is selected for servicing.

48- 50 A check must be made to determine if this vehicle is one requiring low lead gasoline and is being placed first in a queue for a 3-pump lane which has an idle last pump. If so, the status of that last pump must be changed to "blocked" to prevent an unleaded vehicle from being placed at the last pump ahead of the vehicles in the queue during a subsequent arrival.

51- 53 The vehicle is now placed in the proper queue so that it can properly be serviced at the appropriate time. The program control is then transferred back to the timing routine. Note that a vehicle is not created (a record of it made) unless it is necessary to put it in a queue. The attributes of the lanes are changed to properly reflect the status of vehicles being serviced.

54- 71 This is the processing required when a 3-pump lane with the last pump open is selected (from lines 35-36, above).

The vehicle being serviced is unleaded and will be serviced at the last pump of the lane. Thus it's waiting time is 0 (55) and it's service completion time must be determined (56). It is a certainty that one (and only one) of the forward pumps is busy, or the preceding decision logic would have placed this vehicle at the first pump, so the following logic (57-71) determines which forward pump is busy and when the vehicle at that pump is departing. When the service of the vehicle at pump 3 is to be completed prior to that of the vehicle at the forward pump, the status of the last pump becomes blocked (as it will not be able to depart after completion of service), the amount of time it will be delayed is calculated and program control is transferred back to the timing routine (57-61 or 63-67). Otherwise, the status of the last pump is busy, the departure of this vehicle is scheduled and program control transferred to the timing routine (68-71).

72- 79 This is the processing required when a lane, with the required gasoline type, is found that has both the middle and last pumps open. It is already known that there is no lane of this gas type with all pumps open (24-26) so the lane selected is known to be servicing a vehicle at it's first pump.

73- 74 When the lane selected has only 2 pumps, program control is transferred to the 2-pump lane logic for processing the servicing of the vehicle at the last pump (134; H on the flowcharts, Appendix C).

75 The remainder of this section is the logic used when a 3-pump lane is selected.

76- 88 When the vehicle requires low lead gasoline it will be serviced at the middle pump. It's waiting time is recorded as 0 (77) and it's service completion time is determined (78). If it's service will be completed prior to the vehicle at the first pump (79-83), the amount of time it will be delayed is determined (80) and the status of both the middle and last pumps are blocked (81-82). The middle pump status is blocked because the vehicle there will be delayed from departure after service completion and the last pump because 2 vehicles are already being serviced at this 3-pump lane. Otherwise (84-88), the middle pump's status is busy (85), the last pump blocked (86) and the departure of this vehicle must be scheduled (87). In either case the program control must be returned to the timing routine (83 or 88).

89- 99 This processing occurs when the vehicle requires unleaded gasoline and both the middle and last pumps of

a 3-pump lane are idle. The vehicle will be serviced at the last pump. Again, the waiting time is 0 (90) and the time of service completion must be determined (91). If this vehicle's service completion is prior to that of the vehicle at the first pump, delay time must be determined (93), the status of the last pump becomes blocked (94) and program control is returned to the timing routine (95). Otherwise, the last pump's status is busy (97), this vehicle's departure is scheduled (98) and program control is then returned to the timing routine (99).

100-115 This processing occurs when a lane with the required gasoline type and all pumps idle is selected (24-26, above).

101-102 When the lane selected is a 2-pump lane, program control is transferred to the 2-pump lane logic (118-148).

103-115 The logic in this section is for 3-pump lanes only. If the vehicle requires low lead gasoline it will be serviced at the middle pump (107). If it requires unleaded it will be serviced at the first pump (112). In either case the service completion time must be determined (106 or 113), the vehicle's departure scheduled (108 or 114) and the program control returned to the timing routine (109 or 115).

120-148 This processing occurs whenever it is determined that the vehicle is to be serviced at a 2-pump lane.

120-121 Searches for the first lane with the required gasoline type and both lanes idle. If one exists, program control is transferred to line 144.

122-124 Otherwise, a search is made for the first lane with the required gasoline that has the last pump idle. If one exists, program control is transferred to line 133.

125-132 This processing is for vehicles that cannot be immediately serviced and therefore must enter a queue. The lane with the smallest queue and desired gasoline is selected (126-127). A record is then created so that the time of arrival and gas type of the vehicle can be retained for future processing (128-130) and the vehicle placed in the proper queue for later servicing (131). Program control is then returned to the timing routine (132).

133-143 This processing occurs when a 2-pump lane with the first pump busy and the last pump idle, and dispensing the required type gasoline, is found (122-124, above). The vehicle being processed will be immediately serviced at the last pump. Thus waiting time is 0 (134). Service completion time must be determined (135). If this time is prior to the completion of service for the vehicle at the first pump, the amount of delay must be

computed (137) and the last pump becomes blocked (138). Otherwise, the last pump's status is busy (141) and the vehicle's departure must be scheduled (142). After either case, the program control must be returned to the timing routine (139 or 143).

144-148 This processing occurs when a 2-pump lane, dispensing the required gasoline, has both pumps idle. Waiting time for the vehicle being processed is 0 (145), the vehicle goes to the first pump for servicing (146), the service completion time is computed (147) and the departure of the vehicle is scheduled (148). Program control is then returned to the timing routine.

DEPARTURE

Line	Description
2	A local integer variable is defined which is utilized for receiving the lane designation of the lane from which the departure is occuring (see line 3 of the PREAMBLE).
3- 4	When the departure is occuring from a 2-pump lane, program control is transferred to line 98.
5- 28	Determines which pump of a 3-pump lane the departure is occuring from and directs appropriate action as follows.
6- 15	This processing occurs when the departure is from the first pump. This pump is now idle (7). If either the

middle or last pump is busy, no vehicles can leave the queue for servicing at the idle first pump so program control is returned to the timing routine (8-9). If either the middle or last pump was blocked, the blocked vehicle will now also depart so that all pumps for that lane become available (10-13). The queue therefore needs to be checked (31) to determine if there are vehicles waiting to be serviced at these idle pumps (15).

16- 25 This processing occurs when the departure is from the middle pump. The first pump is known to be idle and the middle pump now also becomes idle (18). If the last pump is busy, no vehicles can get to the forward pumps for servicing so program control is returned to the timing routine (19-20). If the last pump was blocked (22), the vehicle that was waiting there will also depart (23) thus opening all pumps for servicing of new vehicles. Therefore the queue must be checked for vehicles and program control is transferred to line 31 to accomplish this (25).

26- 28 This processing occurs when the departure is from the last pump of a 3-pump lane. All pumps are now idle (27) and therefore the queue must be checked for vehicles waiting service. Program control is thus transferred to line 31 (28).

33- 95 This is the processing that occurs when a 3-pump lane becomes available for servicing vehicles waiting in it's queue. Note that this occurs only when all 3 pumps are idle as a new arrival will not enter the queue if a pump is available to service it, a vehicle at a latter pump will prevent a vehicle in the queue from replacing a departure at a forward pump and a vehicle at a latter pump cannot depart if a vehicle is still being serviced at a forward pump.

33 Determines if there are vehicles in the queue. If not, no further processing of this departure can occur and program control is returned to the timing routine (94-95).

34- 35 The first vehicle leaves the queue to be serviced and it's waiting time is calculated.

36- 40 If this vehicle needs unleaded gasoline (36) it goes to the first pump for servicing (37). The time of service completion is determined (38), this vehicle's departure is scheduled (39) and the record used to keep track of this vehicle is destroyed (40).

41- 45 Since the vehicle didn't need unleaded gasoline and this is a 3-pump lane, the vehicle goes to the middle pump to get low lead gasoline (42). It's service completion time is computed (43) and it's departure scheduled

(44). Note that, since a low lead vehicle is first out of the queue in this situation, the first pump remains idle but is now unavailable for use. The record of this vehicle can now be destroyed (45).

46- 47 Determines if there is yet another vehicle in the queue. If not, no further processing of this departure can occur and program control is thus returned to the timing routine (92-93).

48- 49 Get the next vehicle in the queue and determine it's gas type.

50- 73 This is the processing that occurs when the next vehicle in the queue needs unleaded gasoline. It's waiting time is determined (50) and it's time of service completion is determined (51). It is known that either the first or middle pump is already busy servicing a vehicle (34-45, above). Therefore a determination is made as to which pump is already busy (52) and if the service completion time of the vehicle currently being processed is before that o. the vehicle being serviced at the forward pump (53 or 64). If so, the delay time is calculated (54 or 65), the last pump's status becomes blocked (55 or 66), the record of this vehicle is destroyed (56 or 67) and program control is returned to the timing routine (57 or 68). If not, the

AD-A092 278 NAVAL POSTGRADUATE SCHOOL MONTEREY CA F/G 12/2
EXCHANGE SERVICE STATION GASOLINE PUMPING OPERATION SIMULATION.(U)
JUN 80 J F HENN

UNCLASSIFIED NL

2 OF 2

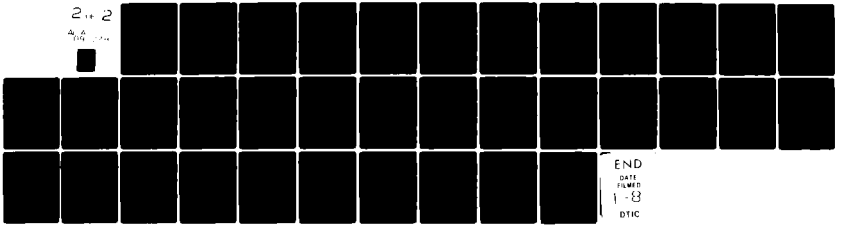

END
DATE FILMED
1-81
DTIC

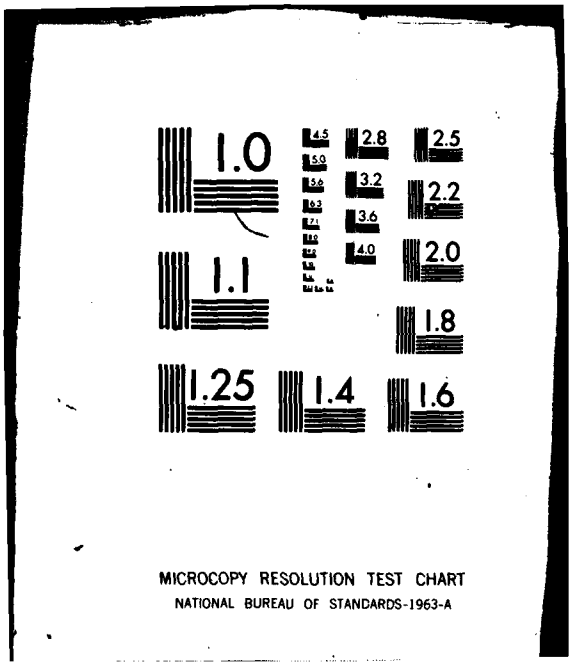
1.0
1.1
1.25
1.4
1.6
1.8
2.0
2.2
2.5
2.8
3.2
3.6
4.0
4.5
5.0
5.6
6.3
7.1
MICROCOPY RESOLUTION TEST CHART
NATIONAL BUREAU OF STANDARDS-1963-A

last pump's status becomes busy (59 or 70), this vehicle's departure is scheduled (60 or 71), the record of the vehicle is destroyed (61 or 72) and program control is returned to the timing routine (62 or 73).

74- 91 This is the processing that occurs when the next car in the queue for this 3-pump lane needs low lead gasoline.

75- 78 If the previous car out of the queue, the middle (and only low lead pump at this lane) pump will already be busy. Thus the last pump's status becomes blocked (76), as the low lead vehicle in the queue blocks an unleaded vehicle from getting to the last pump. The low lead vehicle at the head of the queue remains there (77) and program control is returned to the timing routine (78).

79- 91 If the previous vehicle out of the queue required unleaded gasoline, it went to the first pump for servicing. Thus the waiting time and service completion time for this low lead vehicle can be determined (80-81). If service completion for this vehicle is before that of the vehicle at the first pump (82), the delay time is calculated (83) and the middle pump status becomes blocked (84). Otherwise, the middle pump's status becomes busy (86) and this vehicle's departure is

scheduled (87). Regardless, the last pump's status is blocked as only 2 vehicles can be serviced in the lane at the same time (89). Additionally, the record of this vehicle must be destroyed (90) and the program control returned to the timing routine (91).

100-136 This is the decision logic utilized when the departure occurs at a 2-pump lane.

100-108 This is the processing for a departure from the first pump of a 2-pump lane. Since a vehicle at the first pump can never be blocked from leaving, the status of the first pump becomes idle (101). If the last pump is still busy servicing a vehicle, no further processing of the departure can occur and therefore program control is returned to the timing routine (102-103). If there is a vehicle at the last pump which had been blocked by the vehicle now leaving from the first pump, the last pump is also idled (105-106) and program control is transferred to line 110 in order to begin servicing a vehicle which may be in the queue (107). If the last pump is idle (108), no vehicles can be in the queue and thus program control is returned to the timing routine. (108).

109-136 This is the processing that occurs when the departure is from the last pump or when the departure is from

the first pump with a blocked vehicle also departing from the last pump (105-107, above).

110 The last pump (along with the first) is now idle.

111-117 When there is a vehicle(s) in the queue, the first vehicle leaves the queue (112), it's waiting time is calculated (113) and it goes to the first pump for servicing (114). It's service completion time is determined (115) and it's departure scheduled (116). The record of this vehicle is then destroyed (117). If there are no more cars in the queue, program control is returned to the timing routine (132).

118-132 If there is another vehicle in the queue, it also leaves the queue (119), it's waiting time is calculated (120) and it's service completion time determined (121). If it's service completion time is prior to that of the vehicle at the first pump, the amount of delay time is determined (123), the status of the last pump becomes blocked (124) and the record of this vehicle is destroyed (125). Otherwise, the status of the last pump is busy (127), the departure of the vehicle is scheduled (128) and the record of this vehicle destroyed (129). Regardless, and if there were no vehicles in the queue, program control is returned to the timing routine (130 or 131).

CLOSE PUMPS

Line	Description
2- 4	All arrivals scheduled after the time that the lanes are closed are cancelled so that only the vehicles already being serviced or in the queues will be processed. Thus, only departure events will be on the event list for processing. After all departures are processed, the event list will be empty and thus the timing routine will return program control back to the main program (see line 53, MAIN). Note that, with the current model, there can only be one arrival on the event list at a time, since the next arrival is scheduled only when the current arrival is being processed. Cancelling the arrival in the manner specified allows for easier modification of the model should it be altered in the future to schedule some of the arrivals separately (for example, scheduling the arrivals by type of gasoline required).

APPENDIX C: FLOWCHARTS

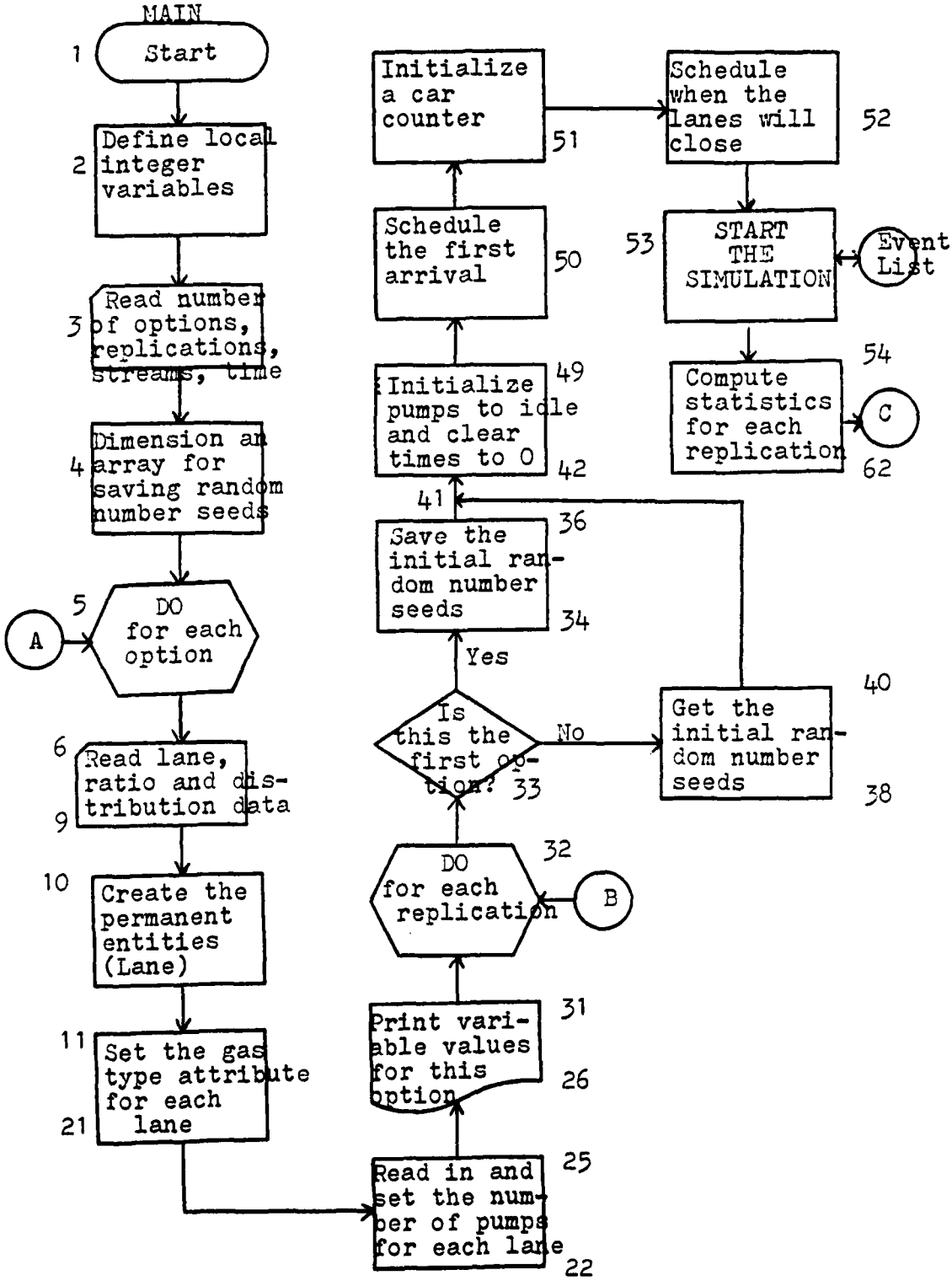

MAIN
(Continued)

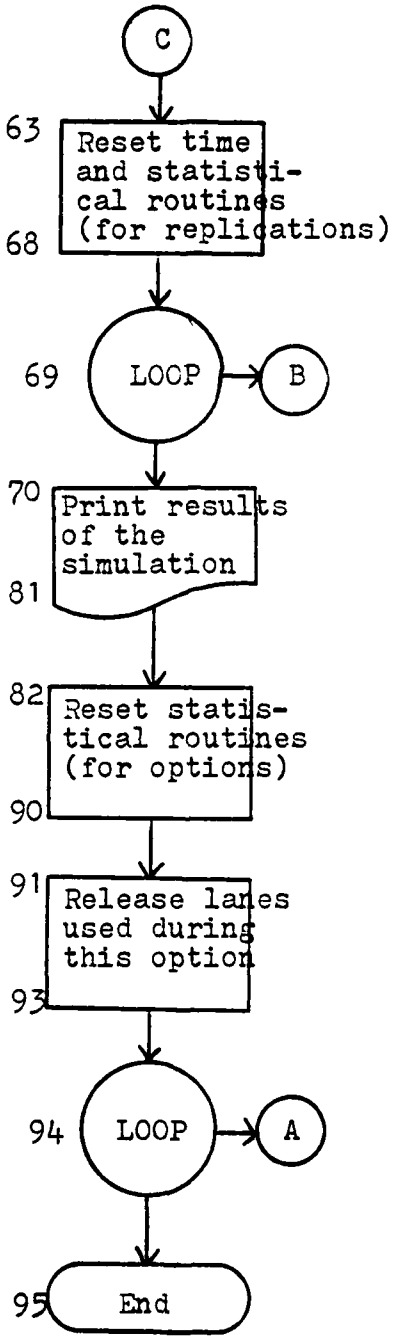

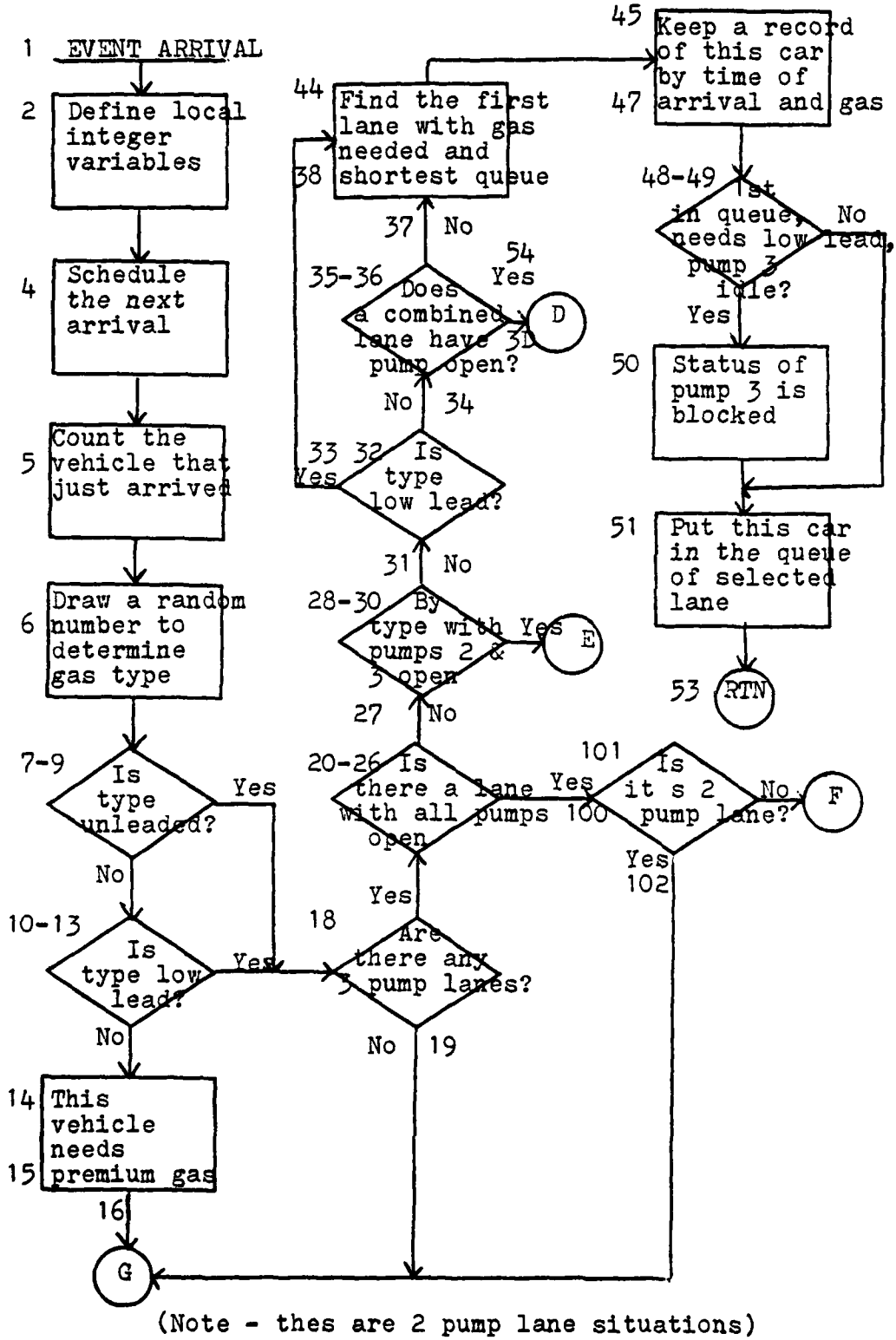

(Note - thes are 2 pump lane situations)

EVENT ARRIVAL
(Continued)

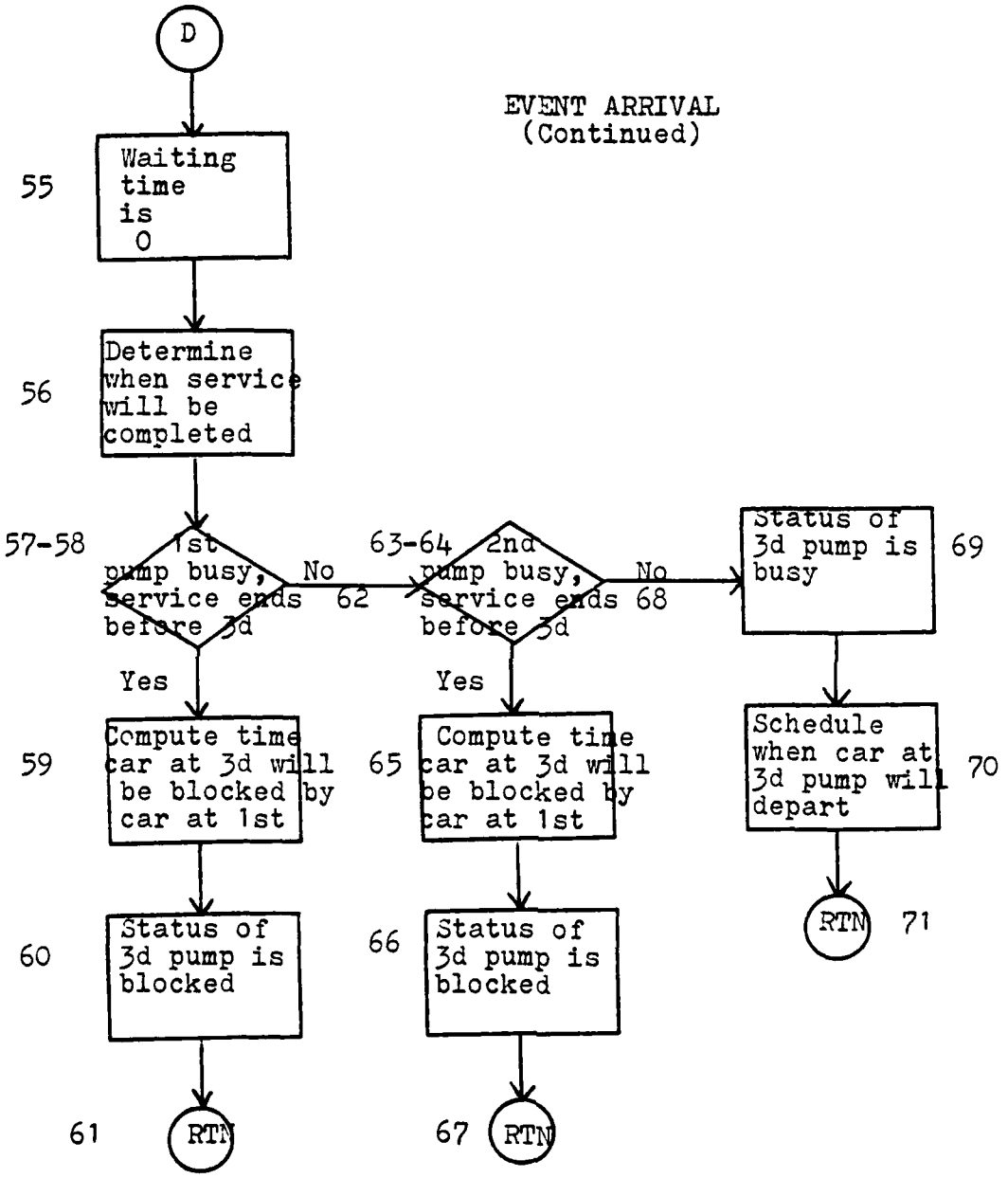

EVENT ARRIVAL
(Continued)

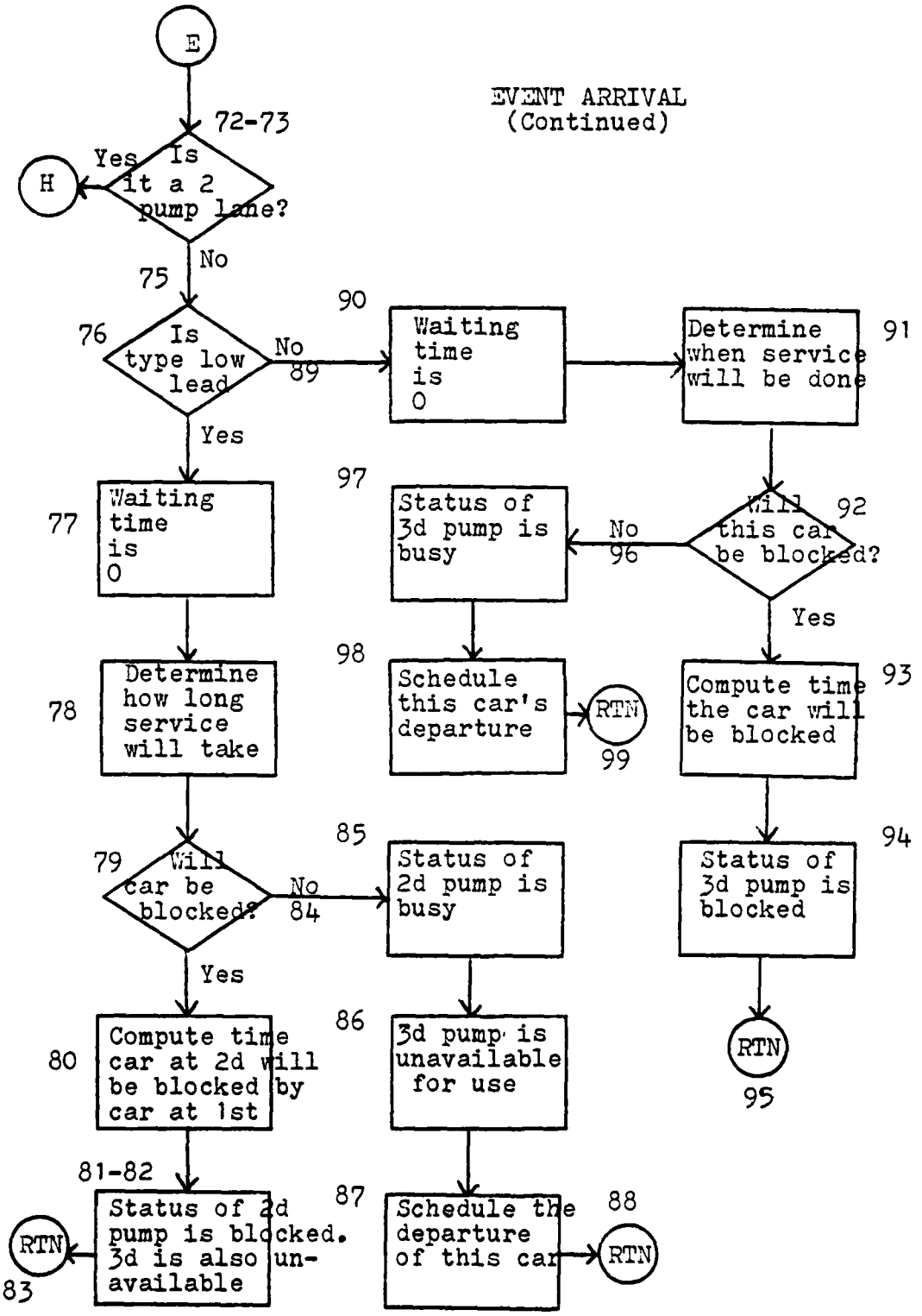

EVENT ARRIVAL
(Continued)

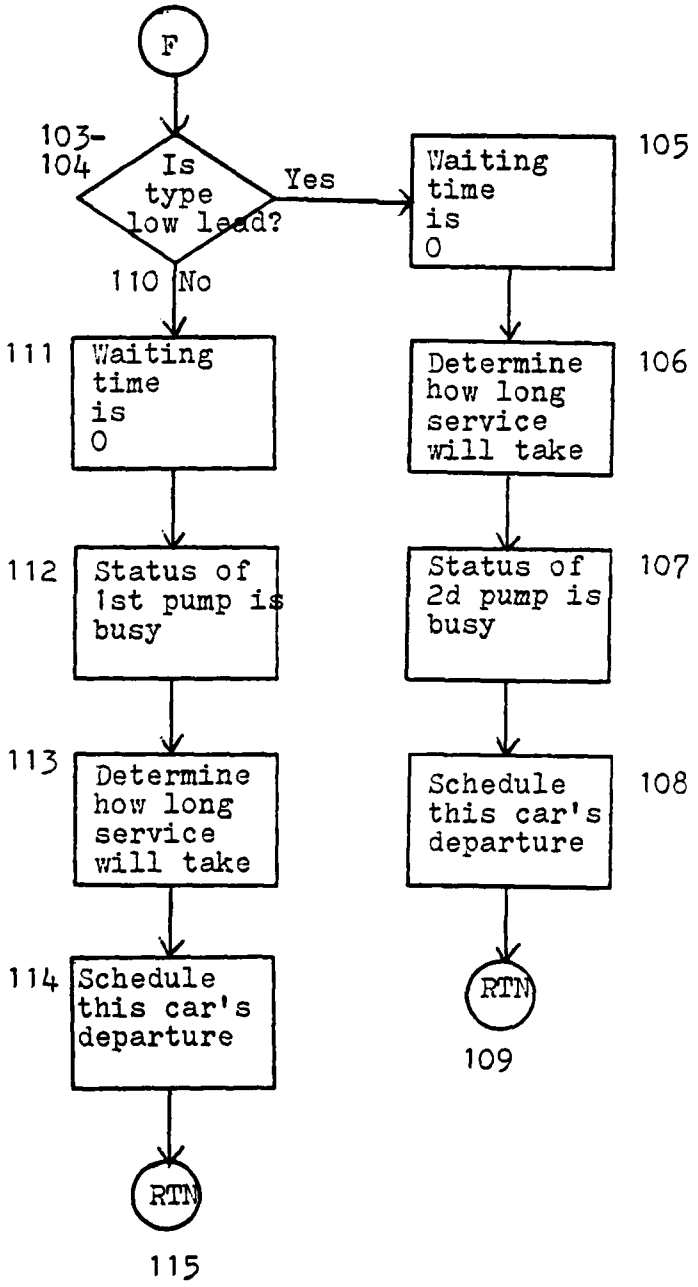

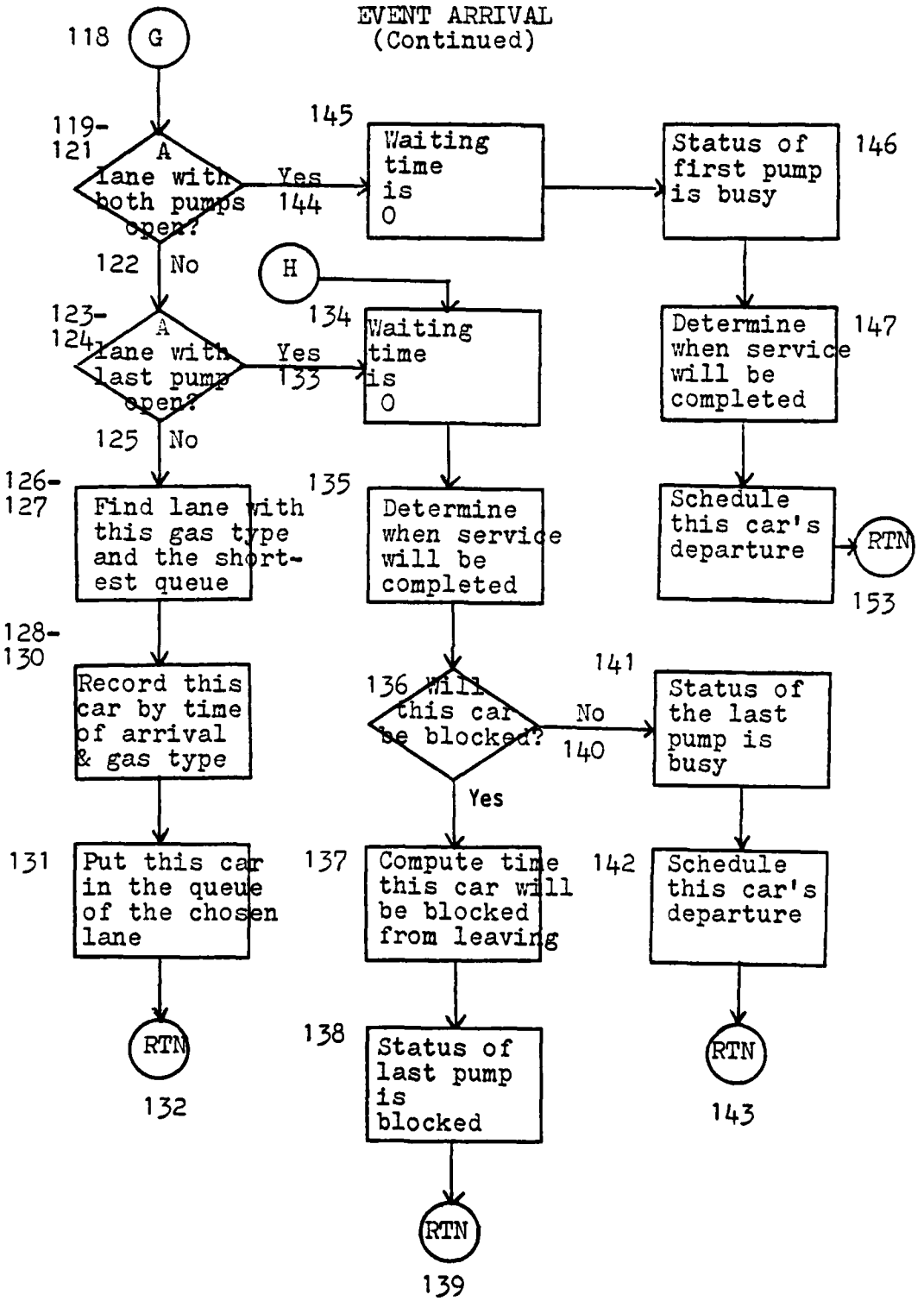
EVENT ARRIVAL
(Continued)
118
G
119-
121
A
lane with both pumps open?
Yes
144
145
Waiting time is 0
146
Status of first pump is busy
122
No
H
123-
124
A
lane with last pump open?
Yes
133
134
Waiting time is 0
147
Determine when service will be completed
125
No
126-
127
Find lane with this gas type and the shortest queue
135
Determine when service will be completed
Schedule this car's departure
RTN
153
128-
130
Record this car by time of arrival & gas type
136
Will this car be blocked?
No
140
141
Status of the last pump is busy
Yes
131
Put this car in the queue of the chosen lane
137
Compute time this car will be blocked from leaving
142
Schedule this car's departure
RTN
132
138
Status of last pump is blocked
RTN
143
RTN
139

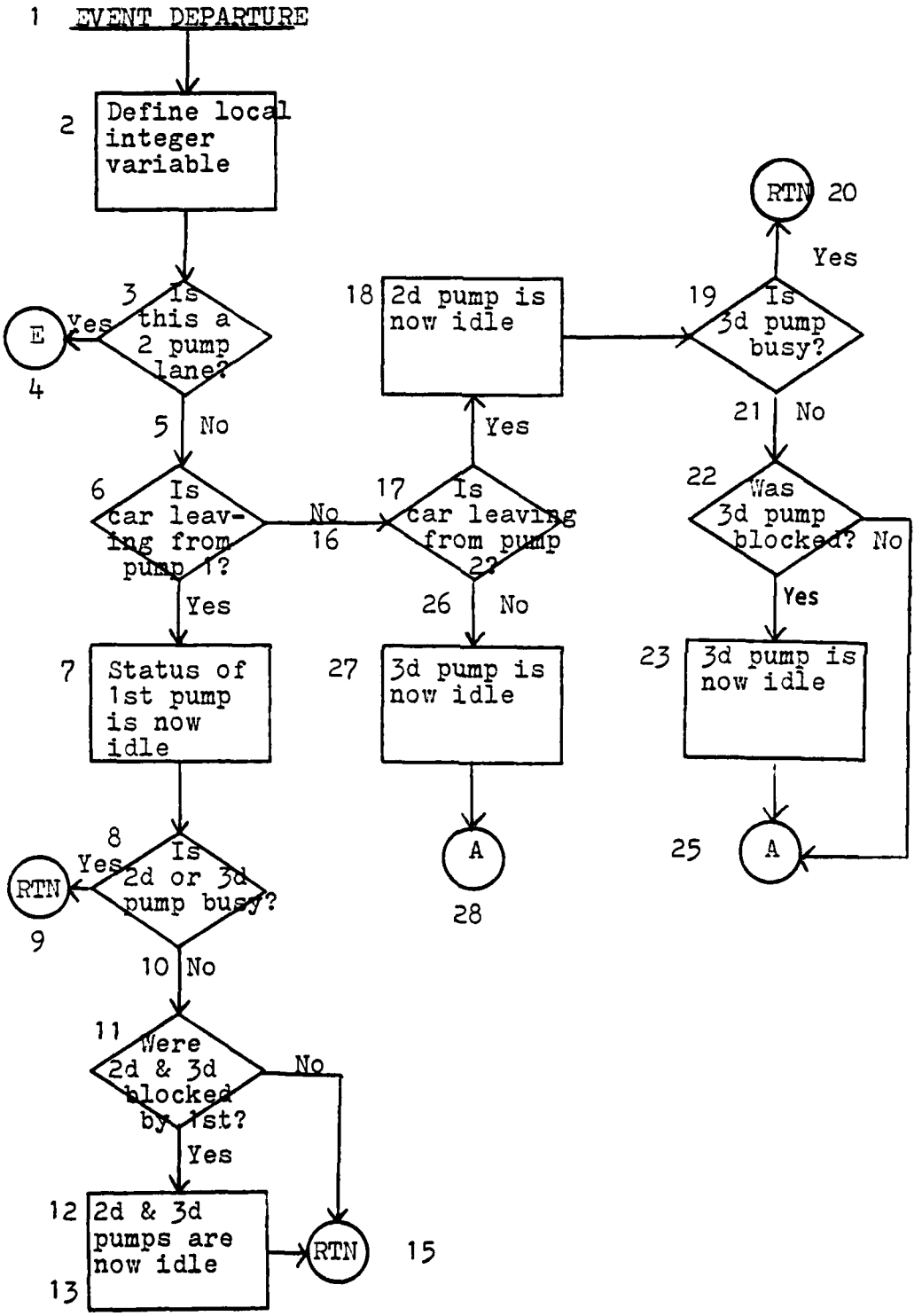
1 EVENT DEPARTURE
2 Define local integer variable
3 Is this a 2 pump lane?
Yes
E
4
5 No
6 Is car leaving from pump 1?
No
16
Yes
7 Status of 1st pump is now idle
8 Is 2d or 3d pump busy?
Yes
RTN
9
10 No
11 Were 2d & 3d blocked by 1st?
No
Yes
12 2d & 3d pumps are now idle
13
RTN
15
17 Is car leaving from pump 2?
Yes
18 2d pump is now idle
26 No
27 3d pump is now idle
A
28
19 Is 3d pump busy?
RTN
20
Yes
21 No
22 Was 3d pump blocked?
No
Yes
23 3d pump is now idle
25
A

EVENT DEPARTURE
(Continued)

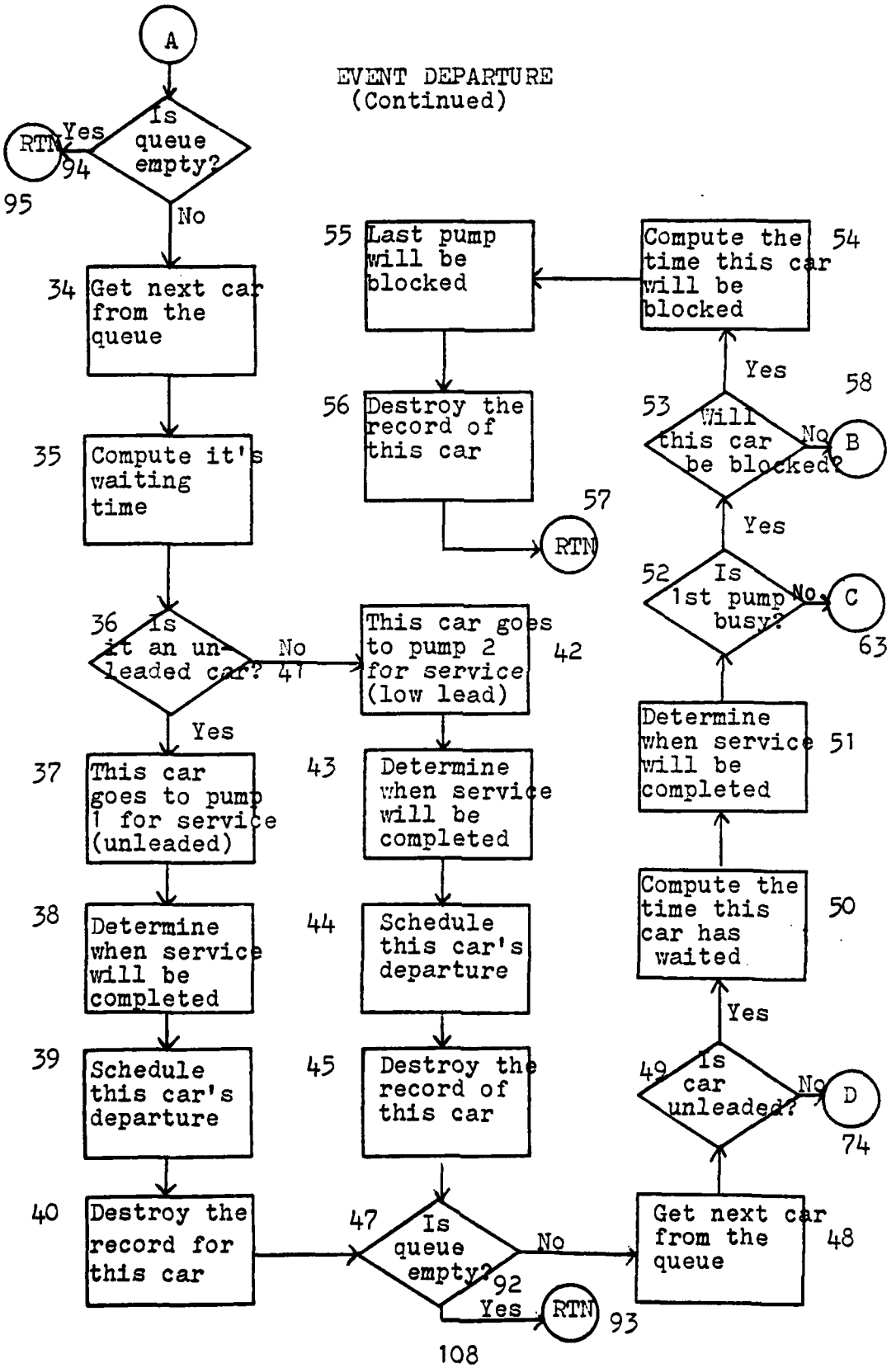

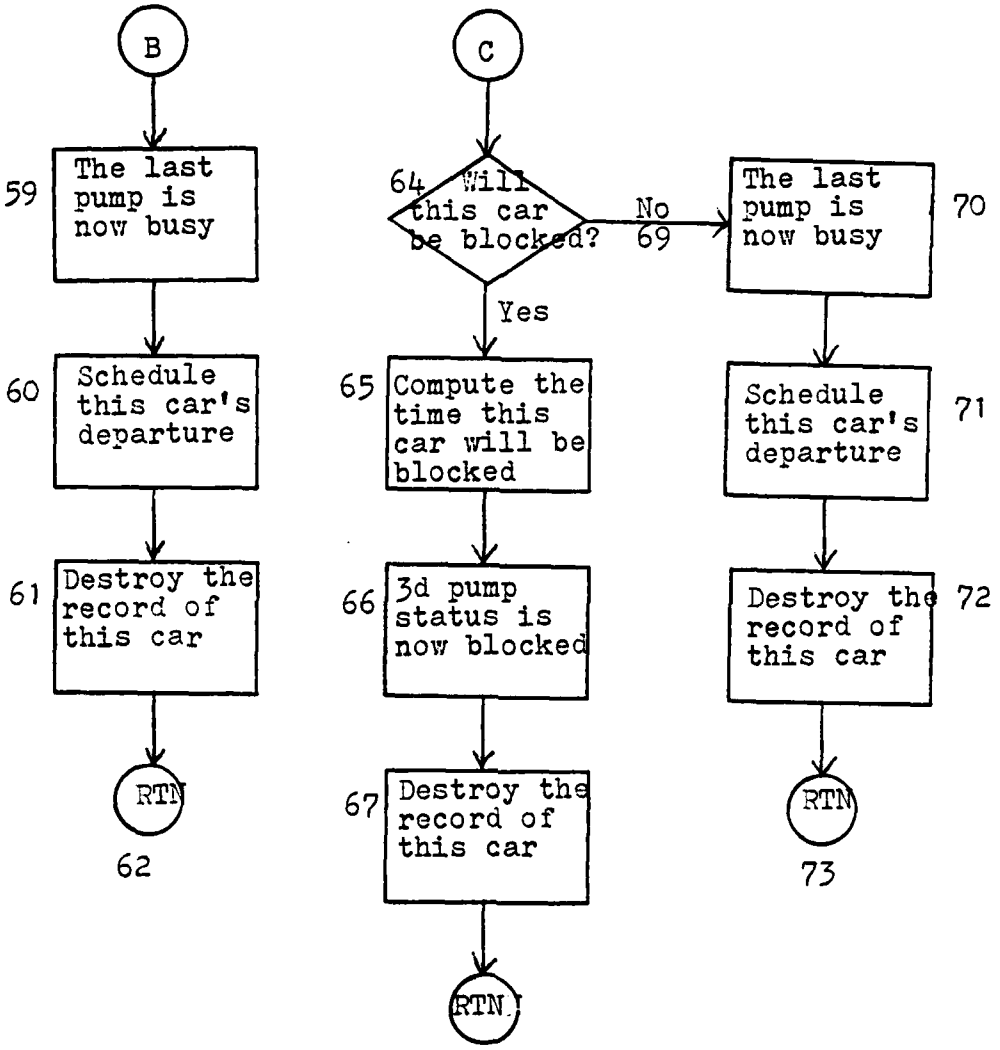
B
59
The last pump is now busy
60
Schedule this car's departure
61
Destroy the record of this car
RTN
62
C
64
Will this car be blocked?
No
69
Yes
65
Compute the time this car will be blocked
66
3d pump status is now blocked
67
Destroy the record of this car
RTN
68
70
The last pump is now busy
71
Schedule this car's departure
72
Destroy the record of this car
RTN
73

EVENT DEPARTURE
(Continued)

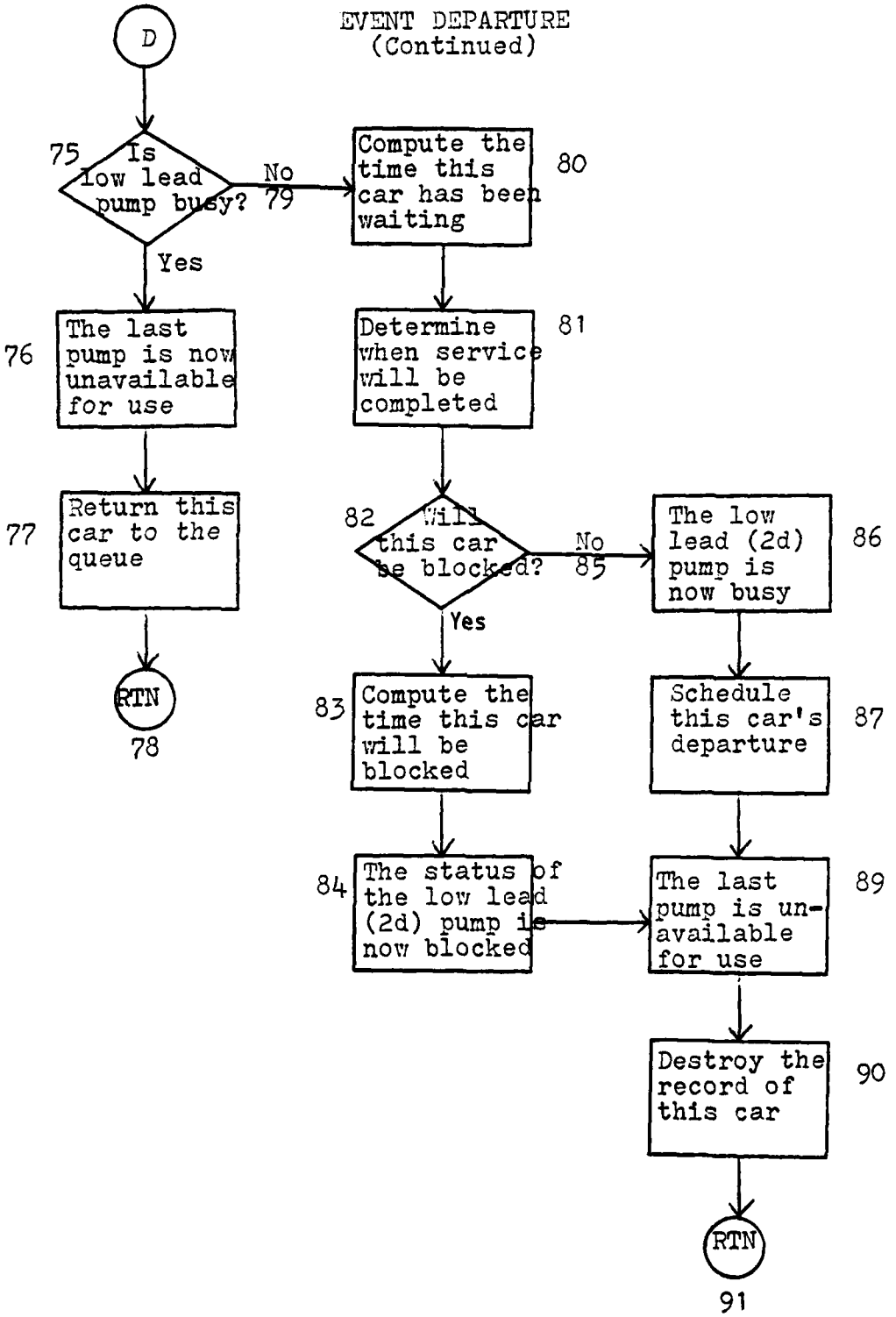

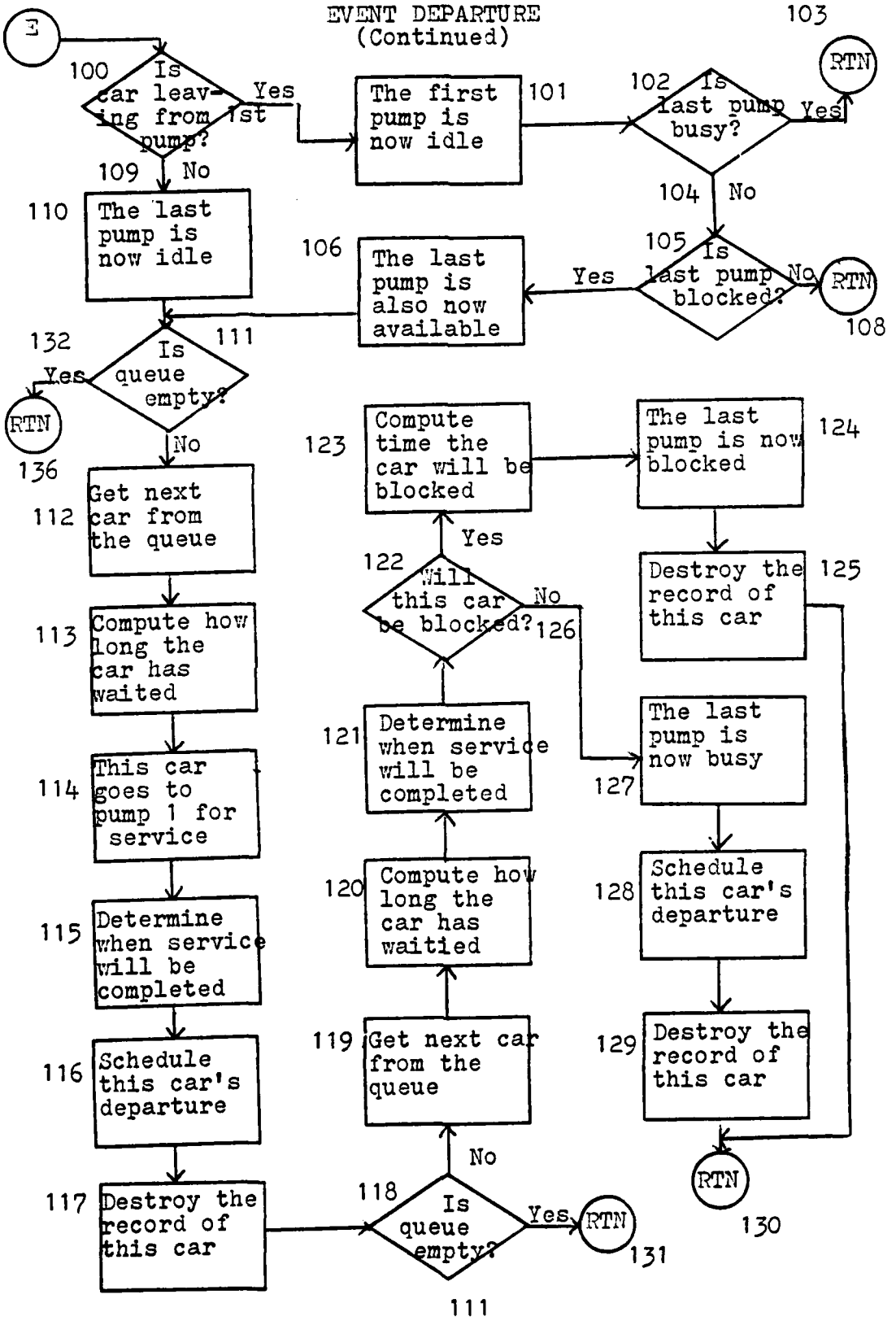
EVENT DEPARTURE
(Continued)
E
100
Is car leaving from 1st pump?
Yes
The first pump is now idle
101
102
Is last pump busy?
Yes
RTN
103
No
104
105
Is last pump blocked?
No
RTN
108
Yes
106
The last pump is also now available
109
No
110
The last pump is now idle
132
Yes
111
Is queue empty?
RTN
136
No
112
Get next car from the queue
113
Compute how long the car has waited
114
This car goes to pump 1 for service
115
Determine when service will be completed
116
Schedule this car's departure
117
Destroy the record of this car
118
Is queue empty?
Yes
RTN
131
No
119
Get next car from the queue
120
Compute how long the car has waitied
121
Determine when service will be completed
122
Will this car be blocked?
Yes
123
Compute time the car will be blocked
No
126
124
The last pump is now blocked
125
Destroy the record of this car
127
The last pump is now busy
128
Schedule this car's departure
129
Destroy the record of this car
RTN
130
111

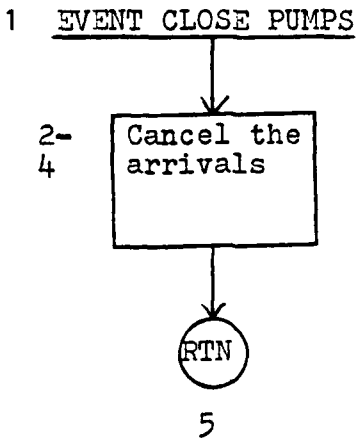
1 EVENT CLOSE PUMPS
2-4
Cancel the arrivals
RTN
5

APPENDIX D. SAMPLE OUTPUT

OPTION 1

GASOLINE PUMPING OPERATIONS WITH PUMPS OPEN 4.0 HOURS

NUMBER OF LANES

UNLEADED	3
LOW LEAD	2
PREMIUM	2
UNLEADED AND LOW LEAD	1

RATIO OF PURCHASES BY TYPE

UNLEADED	45.0 PERCENT
LOW LEAD	35.0 PERCENT
PREMIUM	20.0 PERCENT

AVERAGE INTERARRIVAL TIME OF A VEHICLE = 28.51 SECONDS
AVERAGE SERVICE TIME OF A VEHICLE = 4.18 MINUTES

LANE 1	NUMBER OF PUMPS 2	LANE 5	NUMBER OF PUMPS 2
LANE 2	NUMBER OF PUMPS 2	LANE 6	NUMBER OF PUMPS 2
LANE 3	NUMBER OF PUMPS 2	LANE 7	NUMBER OF PUMPS 2
LANE 4	NUMBER OF PUMPS 2	LANE 8	NUMBER OF PUMPS 3

RESULTS OF SIMULATION

		NUMBER IN QUEUE		MAXIMUM QUEUE	
LANE	GAS TYPE	AVERAGE	STANDARD DEVIATION	AVERAGE	STANDARD DEVIATION
1	1	0	0	2	1
2	1	0	0	2	1
3	1	0	0	1	0
4	2	0	0	2	1
5	2	0	0	2	1
6	3	0	0	1	1
7	3	0	0	2	1
8	4	0	0	2	1

LANE GAS TYPES
1 = UNLEADED, 2 = LOW LEAD, 3 = PREMIUM, 4 = UNLD AND LL

AVERAGE WAITING TIME TO GET TO A PUMP = .70 MINUTES
WITH A STANDATD DEVIATION = .20

AVERAGE NUMBER OF VEHICLES BLOCKED FROM DEPARTING AFTER SERVICE = 50
WITH A STANDARD DEVIATION OF 8
AVERAGE AMOUNT OF TOTAL TIME BLOCKED VEHICLES WERE BLOCKED = 55.72 MIN.
WITH A STANDARD DEVIATION OF 10.86
AVERAGE AMOUNT OF TIME A VEHICLE WAS BLOCKED = 1.10 MINUTES
WITH A STANDARD DEVIATION OF .13

VEHICLES SERVICED WITH LANES OPEN 4.0 HOURS

AVERAGE	502
STANDARD DEVIATION	19

OPTION 2

GASOLINE PUMPING OPERATIONS WITH PUMPS OPEN 4.0 HOOURS

NUMBER OF LANES

UNLEADED	2	RATIO OF PURCHASES BY TYPE	
LOW LEAD	2	UNLEADED	45.0 PERCENT
PREMIUM	2	LOW LEAD	35.0 PERCENT
UNLEADED AND LOW LEAD	0	PREMIUM	20.0 PERCENT

AVERAGE INTERARRIVAL TIME OF A VEHICLE = 28.51 SECONDS
AVERAGE SERVICE TIME OF A VEHICLE = 4.18 MINUTES

LANE	1	NUMBER OF PUMPS	2
LANE	2	NUMBER OF PUMPS	2
LANE	3	NUMBER OF PUMPS	2
LANE	4	NUMBER OF PUMPS	2
LANE	5	NUMBER OF PUMPS	2
LANE	6	NUMBER OF PUMPS	2

RESULTS OF SIMULATION

		NUMBER IN QUEUE		MAXIMUM QUEUE	
LANE	GAS TYPE	AVERAGE	STANDARD DEVIATION	AVERAGE	STANDARD DEVIATION
1	1	8	4	17	6
2	1	8	4	18	6
3	2	1	1	5	2
4	2	1	1	6	2
5	3	0	0	2	1
6	3	0	0	2	1

LANE GAS TYPES
1 = UNLEADED, 2 = LOW LEAD, 3 = PREMIUM, 4 = UNLD AND LL

AVERAGE WAITING TIME TO GET TO A PUMP = 10.73 MINUTES
WITH A STANDARD DEVIATION = 4.25

AVERAGE NUMBER OF VEHICLES BLOCKED FROM DEPARTING AFTER SERVICE = 97
WITH A STANDARD DEVIATION OF 11
AVERAGE AMOUNT OF TOTAL TIME BLOCKED VEHICLES WERE BLOCKED = 120.44 Min.
WITH A STANDARD DEVIATION OF 18.14
AVERAGE AMOUNT OF TIME A VEHICLE WAS BLOCKED = 1.24 MINUTES
WITH A STANDARD DEVIATION OF .10

VEHICLES SERVICED WITH LANES OPEN 4.0 HOURS

AVERAGE	502
STANDARD DEVIATION	19

OPTION 3

GASOLINE PUMPING OPERATIONS WITH PUMPS OPEN 4.0 HOURS

NUMBER OF LANES

UNLEADED	3	RATIO OF PURCHASES BY TYPE	
LOW LEAD	2	UNLEADED	45.0 PERCENT
PREMIUM	1	LOW LEAD	35.0 PERCENT
UNLEADED AND LOW LEAD	0	PREMIUM	20.0 PERCENT

AVERAGE INTERARRIVAL TIME OF A VEHICLE = 28.51 SECONDS
AVERAGE SERVICE TIME OF A VEHICLE = 4.18 MINUTES

LANE	1	NUMBER OF PUMPS 2
LANE	2	NUMBER OF PUMPS 2
LANE	3	NUMBER OF PUMPS 2
LANE	4	NUMBER OF PUMPS 2
LANE	5	NUMBER OF PUMPS 2
LANE	6	NUMBER OF PUMPS 2

RESULTS OF SIMULATION

		NUMBER IN QUEUE		MAXIMUM QUEUE	
LANE	GAS TYPE	AVERAGE	STANDARD DEVIATION	AVERAGE	STANDARD DEVIATION
1	1	0	0	2	1
2	1	0	0	3	1
3	1	1	0	3	1
4	2	1	1	5	2
5	2	1	1	5	2
6	3	4	3	12	5

LANE GAS TYPES
1 = UNLEADED, 2 = LOW LEAD, 3 = PREMIUM, 4 = UNLD AND LL

AVERAGE WAITING TIME TO GET TO A PUMP = 4.22 MINUTES
WITH A STANDARD DEVIATION = 1.62

AVERAGE NUMBER OF VEHICLES BLOCKED FROM DEPARTING AFTER SERVICE = 87
WITH A STANDARD DEVIATION OF 14
AVERAGE AMOUNT OF TOTAL TIME BLOCKED VEHICLES WERE BLOCKED = 106.67 MIN
WITH A STANDARD DEVIATION OF 20.12
AVERAGE AMOUNT OF TIME A VEHICLE WAS BLOCKED = 1.22 MINUTES
WITH A STANDARD DEVIATION OF .10

VEHICLES SERVICED WITH LANES OPEN 4.0 HOURS

AVERAGE	502
STANDARD DEVIATION	19

APPENDIX E. PROGRAM LISTING

NOTE - LINE NUMBERS ARE SHOWN TO THE RIGHT OF EACH STATEMENT FOR EASY REFERENCING TO APPENDICES B AND C.

```
// EXEC SIM25CLG
//SIM.SYSIN DD *
PREAMBLE                                                                    1
  EVENT NOTICES INCLUDE ARRIVAL AND CLOSE.PUMPS                             2
    EVERY DEPARTURE HAS AN ISLAND                                           3
  TEMPORARY ENTITIES                                                        4
    EVERY CAR HAS A TIME.OF.ARRIVAL, A FUEL.TYPE AND MAY BELONG TO A QUEUE  5
  PERMANENT ENTITIES                                                        6
    EVERY LANE HAS A FIRST.PUMP, A MID.PUMP, A LAST.PUMP, A NO.OF.PUMPS,    7
          A 1ST.PUMP.CLEAR, A 2D.PUMP.CLEAR, A 3D.PUMP.CLEAR, A GAS.TYPE,   8
          A MN.NO.CARS, A MAX.NO.CARS AND OWNS A QUEUE                      9
  DEFINE ISLAND AS AN INTEGER VARIABLE                                      10
  DEFINE WAITING.TIME, JAM.TIME, MN.TIME.WAIT, MN.NO.CARS, AVG.NO.JAM,      11
          AVG.TOTAL.JAM AND AVG.AVG.JAM AS VARIABLES                        12
  DEFINE AUTO AND T.AUTO AS VARIABLES                                       13
  TALLY AVG.AUTO AS THE MEAN AND SD.AUTO AS THE STD  OF T.AUTO              14
  ACCUMULATE AVG.QUEUE.LENGTH AS THE AVERAGE AND                            15
          MAX.QUEUE.LENGTH AS THE MAX OF N.QUEUE                            16
  TALLY MEAN.WAITING.TIME AS THE MEAN OF WAITING.TIME                       17
  TALLY NO.JAM AS THE NUM, TOTAL.JAM AS THE SUM AND                         18
          AVG.JAM AS THE MEAN OF JAM.TIME                                   19
  DEFINE IDLE TO MEAN 0                                                     20
  DEFINE BUSY TO MEAN 1                                                     21
  DEFINE BLOCKED TO MEAN 2                                                  22
  DEFINE UNLEADED TO MEAN 1                                                 23
  DEFINE LOW.LEAD TO MEAN 2                                                 24
  DEFINE PREMIUM TO MEAN 3                                                  25
  DEFINE UN.OR.LL TO MEAN 4                                                 26
  TALLY MN.WAITING.TIME AS THE MEAN AND SD.WAITING.TIME AS THE STD          27
          OF MN.TIME.WAIT                                                   28
  TALLY MN.QUEUE.LENGTH AS THE MEAN AND SD.QUEUE.LENGTH AS THE STD          29
          OF MN.NO.CARS                                                     30
  TALLY MN.MAX.QUEUE AS THE MEAN AND SD.MAX.QUEUE AS THE STD                31
          OF MAX.NO.CARS                                                    32
  TALLY MN.NO.JAM AS THE MEAN AND SD.NO.JAM AS THE STD                      33
          OF AVG.NO.JAM                                                     34
  TALLY MN.TOTAL.JAM AS THE MEAN AND SD.TOTAL.JAM AS THE STD                35
          OF AVG.TOTAL.JAM                                                  36
  TALLY MN.AVG.JAM AS THE MEAN AND SD.AVG.JAM AS THE STD                    37
          OF AVG.AVG.JAM                                                    38
  DEFINE SAVE.SEED AS AN INTEGER, 2-DIMENSIONAL ARRAY                       39
  DEFINE N.OPTIONS, N.REPLICATIONS, N.STREAMS, N.UN.LANES, N.LL.LANES,      40
```

```
          N.PR.LANES, N.COMB.LANES, M AND V.JMP AS INTEGER VARIABLES          41
DEFINE UV.RATIO, L..RATIO, PR.RATIO, IA.TIME, LAMBDA AND OPEN.TIME           42
          AS REAL VARIABLES                                                  43
END                                                                          44
```

```
MAIN                                                                    1
  DEFINE OPTION, REPLICATION AND STREAM AS INTEGER VARIABLES            2
  READ N.OPTIONS, N.REPLICATIONS, N.STREAMS AND OPEN.TIME               3
  RESERVE SAVE.SEED(*,*) AS N.STREAMS BY N.REPLICATIONS                 4
  FOR OPTION = 1 TO N.OPTIONS, DO                                       5
    READ N.UN.LANES, N.LL.LANES, N.PR.LANES, N.COMB.LANES,              6
         UN.RATIO, LL.RATIO,  PR.RATIO,                                 7
         IA.TIME, M AND LAMBDA                                          8
    READ N.LANE                                                         9
    CREATE EVERY LANE                                                  10
    FOR LANE = 1 TO N.UN.LANES,  DO                                    11
      LET GAS.TYPE(LANE) = UNLEADED      LOOP                          12
    FOR LANE = N.UN.LANES + 1  TO  N.UN.LANES + N.LL.LANES,  DO        13
      LET GAS.TYPE(LANE) = LOW.LEAD      LOOP                          14
    FOR LANE = N.UN.LANES + N.LL.LANES + 1  TO N.UN.LANES + N.LL.LANES + 15
                                              N.PR.LANES,  DO           16
      LET GAS.TYPE(LANE) = PREMIUM       LOOP                         17
    IF N.COMB.LANES > 0                                                18
      FOR LANE = N.LANE - N.COMB.LANES + 1  TO N.LANE,  DO             19
        LET GAS.TYPE(LANE) = UN.OR.LL    LOOP                        20
    ALWAYS                                                             21
    FOR LANE = 1 TO N.LANE, DO                                         22
      READ N.PUMP                                                      23
      LET NO.OF.PUMPS(LANE) = N.PUMP                                   24
    LOOP                                                               25
    PRINT 14 LINES WITH OPTION, OPEN.TIME,  N.UN.LANES, UN.RATIO * 100.0,  26
         N.LL.LANES, LL.RATIO * 100.0, N.PR.LANES, PR.RATIO * 100.0,   27
         N.COMB.LANES, (60/(1/IA.TIME)) AND (M/LAMBDA)     AS FOLLOWS   28

OPTION  **

          GASOLINE PUMPING OPERATIONS WITH PUMPS OPEN ***.* HOURS

NUMBER OF LANES                          RATIO OF PURCHASES BY TYPE
  UNLEADED              **                   UNLEADED    **.* PERCENT
  LOW LEAD              **                   LOW LEAD    **.* PERCENT
  PREMIUM               **                   PREMIUM     **.* PERCENT
  UNLEADED AND LOW LEAD **

AVERAGE INTERARRIVAL TIME OF A VEHICLE = ***.** SECONDS
AVERAGE SERVICE TIME OF A VEHICLE      = **.** MINUTES

    FOR EACH LANE,  DO                                                 29
      PRINT 1 LINE WITH LANE AND NO.OF.PUMPS(LANE) AS FOLLOWS          30
        LANE **      NUMBER OF PUMPS  *
    LOOP                                                               31
    FOR REPLICATION = 1 TO N.REPLICATIONS,  DO                         32
      IF OPTION = 1                                                    33
```

```
      FOR STREAM = 1 TO N.STREAMS,  DO
        LET SAVE.SEED(STREAM,REPLICATION) = SEED.V(STREAM)
      LOOP
    ELSE
      FOR STREAM = 1 TO N.STREAMS,  DO
        LET SEED.V(STREAM) = SAVE.SEED(STREAM,REPLICATION)
        LOOP
    ALWAYS
    FOR LANE = 1 TO N.LANE,  DO
      LET FIRST.PUMP(LANE) = IDLE
      LET MID.PUMP(LANE)    = IDLE
      LET LAST.PUMP(LANE)   = IDLE
      LET 1ST.PUMP.CLEAR(LANE) = 0.0
      LET 2D.PUMP.CLEAR(LANE) = 0.0
      LET 3D.PUMP.CLEAR(LANE) = 0.0
    LOOP
    SCHEDULE AN ARRIVAL IN EXPONENTIAL.F(IA.TIME,1) MINUTES
    LET AUTO = 0.0
    SCHEDULE A CLOSE.PUMPS IN OPEN.TIME HOURS
    START SIMULATION
    LET T.AUTO = AUTO
    FOR EACH LANE,  DO
      LET MN.NO.CARS(LANE) = AVG.QUEUE.LENGTH(LANE)
      LET MAX.NO.CARS(LANE) = MAX.QUEUE.LENGTH(LANE)
    LOOP
    LET MN.TIME.WAIT = MEAN.WAITING.TIME
    LET AVG.NO.JAM = NO.JAM
    LET AVG.TOTAL.JAM = TOTAL.JAM
    LET AVG.AVG.JAM = AVG.JAM
    LET TIME.V = 0.0
    FOR EACH LANE, DO
      RESET TOTALS OF N.QUEUE(LANE)
    LOOP
    RESET TOTALS OF WAITING.TIME
    RESET TOTALS OF JAM.TIME
  LOOP
  PRINT 5 LINES AS FOLLOWS

                        RESULTS OF SIMULATION

                      NUMBER IN QUEUE                    MAXIMUM QUEUE
LANE    GAS TYPE    AVERAGE   STANDARD DEVIATION     AVERAGE  STD DEVIATION
  FOR EACH LANE,  DO
    PRINT 1 LINE WITH LANE, GAS.TYPE(LANE), MN.QUEUE.LENGTH(LANE),
        SD.QUEUE.LENGTH(LANE), MN.MAX.QUEUE(LANE) AND SD.MAX.QUEUE(LANE)  THUS
 **       *        *****          *****                ****          ****
  LOOP
    PRINT 4 LINES AS FOLLOWS
```

```
LANE GAS TYPES
     1 = UNLEADED,    2 = LOW LEAD,    3 = PREMIUM,    4 = UNLD AND LL

    PRINT 4 LINES WITH MN.WAITING.TIME * HOURS.V * MINUTES.V AND                76
         SD.WAITING.TIME * HOURS.V * MINUTES.V  THUS                            77

     AVERAGE WAITING TIME TO GET TO A PUMP = *******.** MINUTES
         WITH A STANDARD DEVIATION         = *******.**

    PRINT 8 LINES WITH MN.NO.JAM, SD.NO.JAM, MN.TOTAL.JAM * HOURS.V * MINUTES.V,
        SD.TOTAL.JAM * HOURS.V * MINUTES.V, MN.AVG.JAM * HOURS.V * MINUTES.V AND
         SD.AVG.JAM * HOURS.V * MINUTES.V AS FOLLOWS                            80

AVERAGE NUMBER OF VEHICLES BLOCKED FROM DEPARTING AFTER SERVICE = *****
                              WITH A STANDARD DEVIATION OF          *****
AVERAGE AMOUNT OF TOTAL TIME BLOCKED VEHICLES WERE BLOCKED  = *****.** MINUTES
                              WITH A STANDARD DEVIATION OF          *****.**
AVERAGE AMOUNT OF TIME A VEHICLE WAS BLOCKED =              ****.** MINUTES
                              WITH A STANDARD DEVIATION OF          *****.**

    PRINT 5 LINES WITH OPEN.TIME, AVG.AUTO AND SD.AUTO  THUS                    81
         VEHICLES SERVICED WITH LANES OPEN **.* HOURS
                    AVERAGE                *****
                    STANDARD DEVIATION     *****

    RESET TOTALS OF T.AUTO                                                      82
    RESET TOTALS OF MN.TIME.WAIT                                                83
    RESET TOTALS OF AVG.NO.JAM                                                  84
    RESET TOTALS OF AVG.TOTAL.JAM                                               85
    RESET TOTALS OF AVG.AVG.JAM                                                 86
    FOR EACH LANE, DO                                                           87
      RESET TOTALS OF MN.NO.CARS(LANE)                                          88
      RESET TOTALS OF MAX.NO.CARS(LANE)                                         89
    LOOP                                                                        90
    RELEASE FIRST.PUMP, MID.PUMP, LAST.PUMP, NO.OF.PUMPS, 1ST.PUMP.CLEAR,       91
                  2D.PUMP.CLEAR, 3D.PUMP.CLEAR, GAS.TYPE, MN.NO.CARS,           92
                  MAX.NO.CARS, F.QUEUE, L.QUEUE AND N.QUEUE                     93
  LOOP                                                                          94
END                                                                             95
```

```
EVENT ARRIVAL                                                                    1
  DEFINE LANE.SELECTION AND TYPE AS INTEGER VARIABLES                            2
                                                                                 3
  SCHEDULE AN ARRIVAL IN EXPONENTIAL.F(IA.TIME,1) MINUTES                        4
  LET AUTO = AUTO + 1.0                                                          5
  LET RATIO = RANDOM.F(2)                                                        6
  IF RATIO <= UN.RATIO                                                           7
    LET TYPE = UNLEADED                                                          8
    GO TO A                                                                      9
  ELSE                                                                          10
    IF RATIO <= (UN.RATIO + LL.RATIO)                                           11
      LET TYPE = LOW.LEAD                                                       12
      GO TO A                                                                   13
    ELSE                                                                        14
      LET TYPE = PREMIUM                                                        15
      GO TO TWO.PUMP.LANES                                                      16
                                                                                17
*A*  IF N.COMB.LANES = 0                                                        18
      GO TO TWO.PUMP.LANES                                                      19
    ELSE                                                                        20
                                                                                21
**THREE PUMP LANE SITUATIONS**                                                  22
                                                                                23
      FOR EACH LANE, WITH (GAS.TYPE(LANE) = TYPE OR GAS.TYPE(LANE) = UN.OR.LL)
                     AND LAST.PUMP(LANE) = IDLE AND MID.PUMP(LANE) = IDLE AND
                     FIRST.PUMP(LANE) = IDLE,  FIND THE FIRST CASE              26
      IF NONE,                                                                  27
        FOR EACH LANE WITH (GAS.TYPE(LANE) = TYPE OR GAS.TYPE(LANE) = UN.OR.LL)
                     AND LAST.PUMP(LANE) = IDLE AND MID.PUMP(LANE) = IDLE,      29
                     FIND THE FIRST CASE                                        30
          IF NONE,                                                              31
            IF TYPE = LOW.LEAD                                                  32
              GO TO B                                                           33
            ELSE                                                                34
              FOR EACH LANE,  WITH GAS.TYPE(LANE) = UN.OR.LL AND                35
                              LAST.PUMP(LANE) = IDLE,  FIND THE FIRST CASE      36
                IF NONE,                                                        37
*B*               FOR EACH LANE, WITH (GAS.TYPE(LANE) = TYPE OR GAS.TYPE(LANE) =
                         UN.OR.LL), COMPUTE LANE.SELECTION AS THE MINIMUM(LANE)
                         OF N.QUEUE(LANE)                                       40
                  LET LANE.SELECTION = N.QUEUE(LANE.SELECTION)                  41
                  FOR EACH LANE, WITH (GAS.TYPE(LANE) = TYPE OR GAS.TYPE(LANE) =
                       UN.OR.LL) AND N.QUEUE(LANE) = LANE.SELECTION,            43
                       FIND THE FIRST CASE                                      44
                  CREATE A CAR                                                  45
                  LET TIME.OF.ARRIVAL(CAR) = TIME.V                             46
                  LET FUEL.TYPE(CAR) = TYPE                                     47
                  IF NO.OF.PUMPS(LANE) = 3 AND TYPE = LOW.LEAD AND N.QUEUE(LANE) = 0
```

```
                AND LAST.PUMP(LANE) = IDLE                                      49
              LET LAST.PUMP(LANE) = BLOCKED                                     50
            ALWAYS                                                              51
            FILE THIS CAR IN QUEUE(LANE)                                        52
            GO TO RETURN                                                        53
          ELSE                                                                  54
            LET WAITING.TIME = 0.0                                              55
            LET 3D.PUMP.CLEAR(LANE) = TIME.V + (ERLANG.F(M/LAMBDA,M,3)/1440)
            IF FIRST.PUMP(LANE) = BUSY AND                                      57
                  3D.PUMP.CLEAR(LANE) <= 1ST.PUMP.CLEAR(LANE)                   58
              LET JAM.TIME = 1ST.PUMP.CLEAR(LANE) - 3D.PUMP.CLEAR(LANE)         59
              LET LAST.PUMP(LANE) = BLOCKED                                     60
              GO TO RETURN                                                      61
            ELSE                                                                62
              IF MID.PUMP(LANE) = BUSY AND                                      63
                    3D.PUMP.CLEAR(LANE) <= 2D.PUMP.CLEAR(LANE)                  64
                LET JAM.TIME = 2D.PUMP.CLEAR(LANE) - 3D.PUMP.CLEAR(LANE)        65
                LET LAST.PUMP(LANE) = BLOCKED                                   66
                GO TO RETURN                                                    67
              ELSE                                                              68
                LET LAST.PUMP(LANE) = BUSY                                      69
                SCHEDULE A DEPARTURE GIVEN LANE AT 3D.PUMP.CLEAR(LANE)          70
                GO TO RETURN                                                    71
      ELSE                                                                      72
        IF NO.OF.PUMPS(LANE) = 2                                                73
          GO TO C                                                               74
        ELSE                                                                    75
          IF TYPE = LOW.LEAD                                                    76
            LET WAITING.TIME = 0.0                                              77
            LET 2D.PUMP.CLEAR(LANE) = TIME.V + (ERLANG.F(M/LAMBDA,M,3)/1440)
            IF 2D.PUMP.CLEAR(LANE) <= 1ST.PUMP.CLEAR(LANE)                      79
              LET JAM.TIME = 1ST.PUMP.CLEAR(LANE) - 2D.PUMP.CLEAR(LANE)         80
              LET MID.PUMP(LANE) = BLOCKED                                      81
              LET LAST.PUMP(LANE) = BLOCKED                                     82
              GO TO RETURN                                                      83
            ELSE                                                                84
              LET MID.PUMP(LANE) = BUSY                                         85
              LET LAST.PUMP(LANE) = BLOCKED                                     86
              SCHEDULE A DEPARTURE GIVEN LANE AT 2D.PUMP.CLEAR(LANE)            87
              GO TO RETURN                                                      88
          ELSE                                                                  89
            LET WAITING.TIME = 0.0                                              90
            LET 3D.PUMP.CLEAR(LANE) = TIME.V + (ERLANG.F(M/LAMBDA,M,3)/1440)
            IF 3D.PUMP.CLEAR(LANE) <= 1ST.PUMP.CLEAR(LANE)                      92
              LET JAM.TIME = 1ST.PUMP.CLEAR(LANE) - 3D.PUMP.CLEAR(LANE)         93
              LET LAST.PUMP(LANE) = BLOCKED                                     94
              GO TO RETURN                                                      95
            ELSE                                                                96
```

```
                LET LAST.PUMP(LANE) = BUSY                                      97
                SCHEDULE A DEPARTURE GIVEN LANE AT 3D.PUMP.CLEAR(LANE)          98
                GO TO RETURN                                                    99
          ELSE                                                                  100
            IF NO.OF.PUMPS(LANE) = 2                                            101
              GO TO TWO.PUMP.LANES                                              102
            ELSE                                                                103
              IF TYPE = LOW.LEAD                                                104
                LET WAITING.TIME = 0.0                                          105
                LET 2D.PUMP.CLEAR(LANE) = TIME.V + (ERLANG.F(M/LAMBDA,M,3)/1440)
                LET MID.PUMP(LANE) = BUSY                                       107
                SCHEDULE A DEPARTURE GIVEN LANE AT 2D.PUMP.CLEAR(LANE)          108
                GO TO RETURN                                                    109
              ELSE                                                              110
                LET WAITING.TIME = 0.0                                          111
                LET FIRST.PUMP(LANE) = BUSY                                     112
                LET 1ST.PUMP.CLEAR(LANE) = TIME.V + (ERLANG.F(M/LAMBDA,M,3)/1440)
                SCHEDULE A DEPARTURE GIVEN LANE AT 1ST.PUMP.CLEAR(LANE)         114
                GO TO RETURN                                                    115
                                                                                116
                                                                                117
'TWO.PUMP.LANES'                                                                118
                                                                                119
  FOR EACH LANE, WITH GAS.TYPE(LANE) = TYPE AND LAST.PUMP(LANE) = IDLE          120
                 AND FIRST.PUMP(LANE) = IDLE,  FIND THE FIRST CASE              121
    IF NONE,                                                                    122
      FOR EACH LANE, WITH GAS.TYPE(LANE) = TYPE AND LAST.PUMP(LANE) = IDLE,
                     FIND THE FIRST CASE                                        124
        IF NONE,                                                                125
          FOR EACH LANE, WITH GAS.TYPE(LANE) = TYPE, COMPUTE LANE.SELECTION
                         AS THE MINIMUM(LANE) OF N.QUEUE(LANE)                  127
          CREATE A CAR                                                          128
          LET TIME.OF.ARRIVAL(CAR) = TIME.V                                     129
          LET FUEL.TYPE(CAR) = TYPE                                             130
          FILE THIS CAR IN QUEUE(LANE.SELECTION)                                131
          GO TO RETURN                                                          132
        ELSE                                                                    133
'C'       LET WAITING.TIME = 0.0                                                134
          LET 2D.PUMP.CLEAR(LANE) = TIME.V + (ERLANG.F(M/LAMBDA,M,3)/1440)
          IF 2D.PUMP.CLEAR(LANE) <= 1ST.PUMP.CLEAR(LANE)                        136
            LET JAM.TIME = 1ST.PUMP.CLEAR(LANE) - 2D.PUMP.CLEAR(LANE)           137
            LET LAST.PUMP(LANE) = BLOCKED                                       138
            GO TO RETURN                                                        139
          ELSE                                                                  140
            LET LAST.PUMP(LANE) = BUSY                                          141
            SCHEDULE A DEPARTURE GIVEN LANE AT 2D.PUMP.CLEAR(LANE)              142
            GO TO RETURN                                                        143
    ELSE                                                                        144
```

```
        LET WAITING.TIME = 0.0                                                  145
        LET FIRST.PUMP(LANE) = BUSY                                             146
        LET 1ST.PUMP.CLEAR(LANE) = TIME.V + (ERLANG.F(M/LAMBDA,M,3)/1440)       147
        SCHEDULE A DEPARTURE GIVEN LANE AT 1ST.PUMP.CLEAR(LANE)                 148
                                                                                149
                                                                                150
*RETURN*                                                                        151
                                                                                152
  RETURN                                                                        153
END                                                                             154
```

```
EVENT DEPARTURE GIVEN GAS.LANE                                                  1
  DEFINE GAS.LANE AS AN INTEGER VARIABLE                                        2
  IF NO.OF.PUMPS(GAS.LANE) = 2                                                  3
    GO TO A.TWO.PUMP.LANE                                                       4
  ELSE                                                                          5
    IF 1ST.PUMP.CLEAR(GAS.LANE) = TIME.V                                        6
      LET FIRST.PUMP(GAS.LANE) = IDLE                                           7
      IF MID.PUMP(GAS.LANE) = BUSY OR LAST.PUMP(GAS.LANE) = BUSY                8
        GO TO RETURN                                                            9
      ELSE                                                                     10
        IF MID.PUMP(GAS.LANE) = BLOCKED OR LAST.PUMP(GAS.LANE) = BLOCKED       11
          LET MID.PUMP(GAS.LANE) = IDLE                                        12
          LET LAST.PUMP(GAS.LANE) = IDLE                                       13
        ALWAYS                                                                 14
          GO TO GET.CARS.FROM.THE.QUEUE                                        15
    ELSE                                                                       16
      IF 2D.PUMP.CLEAR(GAS.LANE) = TIME.V                                      17
        LET MID.PUMP(GAS.LANE) = IDLE                                          18
        IF LAST.PUMP(GAS.LANE) = BUSY                                          19
          GO TO RETURN                                                         20
        ELSE                                                                   21
          IF LAST.PUMP(GAS.LANE) = BLOCKED                                     22
            LET LAST.PUMP(GAS.LANE) = IDLE                                     23
          ALWAYS                                                               24
            GO TO GET.CARS.FROM.THE.QUEUE                                      25
      ELSE                                                                     26
        LET LAST.PUMP(GAS.LANE) = IDLE                                         27
        GO TO GET.CARS.FROM.THE.QUEUE                                          28
                                                                               29
                                                                               30
'GET.CARS.FROM.THE.QUEUE'                                                      31
                                                                               32
  IF QUEUE(GAS.LANE) IS NOT EMPTY                                              33
    REMOVE FIRST CAR FROM THE QUEUE(GAS.LANE)                                  34
    LET WAITING.TIME = TIME.V - TIME.OF.ARRIVAL(CAR)                           35
    IF FUEL.TYPE(CAR) = UNLEADED                                               36
      LET FIRST.PUMP(GAS.LANE) = BUSY                                          37
      LET 1ST.PUMP.CLEAR(GAS.LANE) = TIME.V + (ERLANG.F(M/LAMBDA,M,3)/1440)    38
      SCHEDULE A DEPARTURE GIVEN GAS.LANE AT 1ST.PUMP.CLEAR(GAS.LANE)          39
      DESTROY THIS CAR                                                         40
    ELSE                                                                       41
      LET MID.PUMP(GAS.LANE) = BUSY                                            42
      LET 2D.PUMP.CLEAR(GAS.LANE) = TIME.V + (ERLANG.F(M/LAMBDA,M,3)/1440)     43
      SCHEDULE A DEPARTURE GIVEN GAS.LANE AT 2D.PUMP.CLEAR(GAS.LANE)           44
      DESTROY THIS CAR                                                         45
    ALWAYS                                                                     46
      IF QUEUE(GAS.LANE) IS NOT EMPTY                                          47
        REMOVE FIRST CAR FROM THE QUEUE(GAS.LANE)                              48
```

```
        IF FUEL.TYPE(CAR) = UNLEADED                                              49
          LET WAITING.TIME = TIME.V - TIME.OF.ARRIVAL(CAR)                        50
          LET 3D.PUMP.CLEAR(GAS.LANE) = TIME.V + (ERLANG.F(M/LAMBDA,M,3)/1440)
          IF FIRST.PUMP(GAS.LANE) = BUSY                                          52
            IF 3D.PUMP.CLEAR(GAS.LANE) <= 1ST.PUMP.CLEAR(GAS.LANE)                53
              LET JAM.TIME = 1ST.PUMP.CLEAR(GAS.LANE) - 3D.PUMP.CLEAR(GAS.LANE)
              LET LAST.PUMP(GAS.LANE) = BLOCKED                                   55
              DESTROY THIS CAR                                                    56
              GO TO RETURN                                                        57
            ELSE                                                                  58
              LET LAST.PUMP(GAS.LANE) = BUSY                                      59
              SCHEDULE A DEPARTURE GIVEN GAS.LANE AT 3D.PUMP.CLEAR(GAS.LANE)
              DESTROY THIS CAR                                                    61
              GO TO RETURN                                                        62
          ELSE                                                                    63
            IF 3D.PUMP.CLEAR(GAS.LANE) <= 2D.PUMP.CLEAR(GAS.LANE)                 64
              LET JAM.TIME = 2D.PUMP.CLEAR(GAS.LANE) - 3D.PUMP.CLEAR(GAS.LANE)
              LET LAST.PUMP(GAS.LANE) = BLOCKED                                   66
              DESTROY THIS CAR                                                    67
              GO TO RETURN                                                        68
            ELSE                                                                  69
              LET LAST.PUMP(GAS.LANE) = BUSY                                      70
              SCHEDULE A DEPARTURE GIVEN GAS.LANE AT 3D.PUMP.CLEAR(GAS.LANE)
              DESTROY THIS CAR                                                    72
              GO TO RETURN                                                        73
        ELSE                                                                      74
          IF MID.PUMP(GAS.LANE) = BUSY                                            75
            LET LAST.PUMP(GAS.LANE) = BLOCKED                                     76
            FILE THIS CAR FIRST IN QUEUE(GAS.LANE)                                77
            GO TO RETURN                                                          78
          ELSE                                                                    79
            LET WAITING.TIME = TIME.V - TIME.OF.ARRIVAL(CAR)                      80
            LET 2D.PUMP.CLEAR(GAS.LANE) = TIME.V + (ERLANG.F(M/LAMBDA,M,3)/1440)
            IF 2D.PUMP.CLEAR(GAS.LANE) <= 1ST.PUMP.CLEAR(GAS.LANE)                82
              LET JAM.TIME = 1ST.PUMP.CLEAR(GAS.LANE) - 2D.PUMP.CLEAR(GAS.LANE)
              LET MID.PUMP(GAS.LANE) = BLOCKED                                    84
            ELSE                                                                  85
              LET MID.PUMP(GAS.LANE) = BUSY                                       86
              SCHEDULE A DEPARTURE GIVEN GAS.LANE AT 2D.PUMP.CLEAR(GAS.LANE)
            ALWAYS                                                                88
              LET LAST.PUMP(GAS.LANE) = BLOCKED                                   89
              DESTROY THIS CAR                                                    90
              GO TO RETURN                                                        91
      ELSE                                                                        92
        GO TO RETURN                                                              93
  ELSE                                                                            94
    GO TO RETURN                                                                  95
                                                                                  96
```

```
                                                                                97
'A.TWO.PUMP.LANE'                                                               98
                                                                                99
  IF 1ST.PUMP.CLEAR(GAS.LANE) = TIME.V                                         100
    LET FIRST.PUMP(GAS.LANE) = IDLE                                            101
    IF LAST.PUMP(GAS.LANE) = BUSY                                              102
      GO TO RETURN                                                             103
    ELSE                                                                       104
      IF LAST.PUMP(GAS.LANE) = BLOCKED                                         105
        LET LAST.PUMP(GAS.LANE) = IDLE                                         106
        GO TO OPEN.LANE                                                        107
      ELSE  GO TO RETURN                                                       108
  ELSE                                                                         109
'OPEN.LANE'  LET LAST.PUMP(GAS.LANE) = IDLE                                    110
    IF QUEUE(GAS.LANE) IS NOT EMPTY                                            111
      REMOVE FIRST CAR FROM THE QUEUE(GAS.LANE)                                112
      LET WAITING.TIME = TIME.V - TIME.OF.ARRIVAL(CAR)                         113
      LET FIRST.PUMP(GAS.LANE) = BUSY                                          114
      LET 1ST.PUMP.CLEAR(GAS.LANE) = TIME.V + (ERLANG.F(M/LAMBDA,M,3)/1440)
      SCHEDULE A DEPARTURE GIVEN GAS.LANE AT 1ST.PUMP.CLEAR(GAS.LANE)          116
      DESTROY THIS CAR                                                         117
      IF QUEUE(GAS.LANE) IS NOT EMPTY                                          118
        REMOVE FIRST CAR FROM QUEUE(GAS.LANE)                                  119
        LET WAITING.TIME = TIME.V - TIME.OF.ARRIVAL(CAR)                       120
        LET 2D.PUMP.CLEAR(GAS.LANE) = TIME.V + (ERLANG.F(M/LAMBDA,M,3)/1440)
        IF 2D.PUMP.CLEAR(GAS.LANE) <= 1ST.PUMP.CLEAR(GAS.LANE)                 122
          LET JAM.TIME = 1ST.PUMP.CLEAR(GAS.LANE) - 2D.PUMP.CLEAR(GAS.LANE)
          LET LAST.PUMP(GAS.LANE) = BLOCKED                                    124
          DESTROY THIS CAR                                                     125
        ELSE                                                                   126
          LET LAST.PUMP(GAS.LANE) = BUSY                                       127
          SCHEDULE A DEPARTURE GIVEN GAS.LANE AT 2D.PUMP.CLEAR(GAS.LANE)       128
          DESTROY THIS CAR                                                     129
        ALWAYS  GO TO RETURN                                                   130
      ELSE  GO TO RETURN                                                       131
    ELSE                                                                       132
                                                                               133
'RETURN'                                                                       134
                                                                               135
  RETURN                                                                       136
END                                                                            137
```

```
EVENT CLOSE.PUMPS                                                    1
  FOR EVERY ARRIVAL IN EV.S(I.ARRIVAL), DO                           2
    CANCEL THE ARRIVAL                                               3
  LOOP                                                               4
  RETURN                                                             5
END                                                                  6
```

```
//GO.SYSIN DD *                                                                  DATA CARD
        3          20          3          4.0                                        1
        3           2          2           1                                         2
      .45         .35        .20                                                     3
   .4751          14       3.35                                                      4
        8                                                                            5
   2    2    2    2    2    2    2    3                                              6
       2           2          2          0                                           7
      .45         .35        .20                                                     8
   .4751          14       3.35                                                      9
        6                                                                           10
   2    2    2    2    2    2                                                        11
        3           2          1          0                                          12
      .45          .35        .20                                                    13
   .4751          14       3.35                                                     14
        6                                                                           15
   2    2    2    2    2    2                                                        16
```

BIBLIOGRAPHY

1. Consolidated Analysis Centers Inc., SIMSCRIPT II.5 Reference Handbook, 2nd Edition, 1976

2. Fishman, G.S., Principles of Discrete Event Simulation, Edition, John Wiley & Sons, Inc., 1978.

3. Hillier, F.S. and Lieberman, G.J., Operations Research, 2nd Edition, Holden-Day, Inc., 1974.

4. Pfaffenberger, R.C. and Patterson, J.H., Statistical Methods for Business and Economics, 4th Edition, Richard D. Irwin, Inc., 1977.

5. Siegel, S., Nonparametric Statistics for the Behavioral Sciences, 1st Edition, McGraw-Hill, 1956.

INITIAL DISTRIBUTION LIST

		No. Copies
1.	Defense Technical Information Cameron Station Alexandria, Virginia 22314	2
2.	Library, Code 0142 Naval Postgraduate School Monterey, California 93940	2
3.	Department Chairman, Code 54 Department of Administrative Sciences Naval Postgraduate School Monterey, California 93940	1
4.	LT Ellen F. Roland, Code 55Ro Department of Operations Research Naval Postgraduate School Monterey, California 93940	1
5.	LCDR Robert B. Cunningham, Code 54Cn Department of Administrative Sciences Naval Postgraduate School Monterey, California 93940	1
6.	CDR Neale W. Evans, Code 48 Naval Postgraduate School Exchange Office Naval Postgraduate School Monterey, California 93940	1
7.	MAJ James F. Henn, USA U.S. Army Combat Developments Experimentation Command ATTN: ATEC-PL-PA Fort Ord, California 93941	1